ELECTRICAL ENGINEERING

(Electrical Machines and Appliances)

THEORY - I

VOCATIONAL EDUCATION

Higher Secondary - First Year

A Publication under
Government of Tamilnadu
Distribution of Free Textbook Programme
(NOT FOR SALE)

Untouchability is a Sin
Untouchability is a Crime
Untouchability is Inhuman

TAMILNADU
TEXTBOOK CORPORATION
College Road, Chennai - 600 006.

© Government of Tamilnadu
First Edition - 2010

CHAIRPERSON

Mr. K. GOVINDASAMY
Senior Lecturer / Electrical
Bhakthavatsalam Polytechnic College,
Kanchipuram - 631 552

AUTHORS

Mr. A. RAMESH
Vocational Instructor
Govt. Model Hr. Sec. School
Saidapet, Chennai - 15.

Mr. R. Balamurugan
Vocational Instructor
Govt. Model Hr. Sec. School
Saidapet, Chennai - 15.

Mr. V.V. Shanmugadoss
Vocational Teacher
Govt. Hr. Sec. School
Perunagar
Kanchipuram - 603 404

Mr. P. Muthusamy
Vocational Instructor
Govt. Boys Hr. Sec. School
Namakkal South
Namakkal

Mr. Kasinathan
Vocational Instructor
General Kariappa Hr. Sec. School
Saligramam
Chennai - 600 093

This book has been prepared by The Directorate of School Education on behalf of the Government of Tamilnadu

This book has been printed on 60 GSM Paper

Printed by Offset at:

HIGHER SECONDARY - VOCATIONAL COURSE

ELECTRICAL MACHINES AND APPLIANCES

Syllabus for XI Standard

Theory I (ELECTRICAL ENGINEERING)

1. INTRODUCTION OF ELECTRICAL ENGINEERING

Introduction – methods of power generation – electrical safety – safety precautions of electrician – electric shock – preventive method of electric shock - first aid.

2. MATERIALS AND TOOLS USED IN ELECTRICAL ENGINEERING DEPARTMENT

Electric conductor – types of electric conductor – properties of electric conductor – electrical insulating materials – properties – types of insulating materials – electrical accessories – types of switches – fuse unit – socket - ceiling rose – hand tools.

3. ELECTRICAL TERMS AND DC CIRCUITS

Current – voltage – resistance – ampere – volt – ohms – ohm's law – capacitance – krichoff's law - electrical circuit – closed electric circuit – open electric circuit – electric short circuit – series circuit – parallel circuit – series parallel circuit – power – energy calculation.

4. ELECTRO MAGNETISM

Magnetic materials – Electro magnet – magnetic effect due to current – flemming's right hand rule – max-well's cork screw rule – magnetic field in the coil – end rule – magnetic reaction when the current passing in a conductor in same direction and opposite direction – Faraday's electro magnetic induction – induced electro motive force – statically induced e.m.f – self and mutual induced e.m.f lenz's law – hysterisis hysterisis loop – energy stored in a magnetic filed.

5. ELECTRICAL EFFECT

Electrical energy	-	Light energy (lamp – CFL)
Electrical energy	-	Sound energy (Bell – Syren)
Electrical energy	-	Magnetic energy (Electromagnet)
Electrical Energy	-	Heat Energy (Iron box)
electrical energy	-	Chemical energy (Electroplating – Battery charging)
electrical energy	-	Mechanical energy (Electric Motor)

6. BATTERIES

Battery – types of Batteries – primary cells – secondary cells – difference between primary cells and secondary cells – Lead acid cell – recharge batteries – watch cell – UPS.

7. A.C. CIRCUITS AND ELECTRICAL MEASURING INSTRUMENTS

Alternating current - A.C. wave form - power factor - R.M.S. value - phase difference - pure resistive circuit - inductive circuit - capacitive circuit - R.L. circuit - R.C. circuit - R.L.C. circuit - star delta connection and two wattmeter method.

Ammeter – Voltmeter – ohm meter – watt meter – multi meter – Tong tester – Tecometer – megger – single phase energy meter – Three phase energy meter.

8. TRANSFORMER

Introduction – construction – operation – types of transformer – uses – protective devices of transformer – transformer oil.

9. DC GENERATOR

Basic Principle – construction – parts of generator – method of functioning – types of generator – series generator – shunt generator – compound generator.

10. DC MOTOR

Basic Principle – construction – parts of DC motor – method of functioning – types of DC motor – series motor – Shunt motor – compound Motor.

11. AC GENERATOR (ALTERNATOR)

Construction – operation – parts of ac generator - types of AC generator – single phase AC generator - three phase AC generator.

12. AC MOTORS

Single phase motor – construction – operation – uses.

TYPES OF SINGLE PHASE MOTOR

i) Split phase motors

ii) Capacitor type motors

iii) Repulsion type motors

iv) Shaded pole motors

v) Universal motors

vi) Submorsible type motors

Three phase induction motor – types – construction – operation – parts of three phase motors – stator – Rotor.

SQUIRREL CAGE INDUCTION MOTOR

a) Single squirrel cage induction motor.

b) Double squirrel cage induction motor

13. MOTOR STARTERS

AC motor starters : DOL starter – star / delta starter – Auto transformer starter – slipring motor starter (resistance type starter).

DC MOTOR STARTERS

Three point starter – four point starter.

14. ELECTRONICS

Semi conductors – electrons and holes – intrinsic semi conductor – extrinsic semi conductor - dopping of semi conductor – N. type semi conductor – P. type semi conductor – PN Junction diode – half wave rectifier – full wave rectifire – bridge rectifire – Zener diode – light emitting diode – Junction transistor – PNP, NPN transistors – SCR.

PREFACE

This book presents simple, explicit and easy for learning at the begining level for the subject on **Electrical Engineering.** Considerable emphasis is laid on the fundamentals physical concepts, principles and functions of various elements.

The Government of Tamilnadu is deciding to revamp Vocational Education in Higher Secondary Student to make them easy to understand higher studies in engineering faculty.

The students at school final level and the beginers on this subject can easily able to understand the Principles and Concepts. Much care is taken to explain all the details with neat diagram and sketches. All the topics of this book is self illustrative. The students at the begining level will learn this book with much interest themselves, because such care is taken while preparation of this book.

I personally thank all for giving me this best opportunity to bring out a best book for benefit of the Vocational Students at school final level. All the readers of this book will enrich knowledge on basic **Electrical Engineering**, which makes us feel proud and happy.

Thiru. K. Govindasamy
Chairperson

CONTENT

Sl.No.		Page No.
1.	Introduction of Electrical Engineering	1
2.	Materials and Tools Used in Electrical Engineering Department	10
3.	Electrical Terms and DC Circuits	20
4.	Electro Magnetism	71
5.	Electrical Effect	84
6.	Batteries	92
7.	A.C. Circuits and Electrical Measuring Instruments	109
8.	Transformer	151
9.	DC Generator	168
10.	DC Motor	184
11.	AC Generator (Alternator)	193
12.	AC Motors	206
13.	Motor Starters	226
14.	Electronics	233

1. ELECTRICAL ENGINEERING

1.1. INTRODUCION

The subjects is introduced in Higher Secondary level. In this subject students are taught how to maintain and repair electrical appliances and electrical machine how to connect electrical circuits and repairing minor or major faults in the circuits and motor rewinding both theoretically and practically. So by learning this subjects students are able to earn of their own by practicing such learning.

We know, the universe consists of five big natural energy sources like water, land, Air, fire & space. The Sixth important energy developed by human is called "Electricity". In this modern world, for our day to day life the electricity plays a vital role. Simply to say, even man lives without food but not lives without Electricity. Because in our life, the electrical goods play an important role. Hence the students must know about this source and how it is applied.

Electricity is one type of energy. All matter whether solid, liquid or, gaseous consists of minute particles known as Atoms. According to modern Research electric current means flow of electron. So we need to know about the Atom.

1.2. ATOM

It has a hard central core known as nucleus. It contains two type of particles one is known as proton and carries positive charge. The other is neutron, which is electrically neutral, i.e. it carries no charge. Around the nucleus in elliptical orbit the electrons one revolving. Electrons carry the negative charge. The number of electron are number of protons in a atom are equal. So the atom is electrically neutral. The number of protons in the nucleus of atom gives the atomic number. The total numbers of neutron and proton are known as atomic weight. Because negligible weight of the electron is not taken to calculate atomic weight.

1.3. METHODS OF ELECTRICITY PRODUCTS

An electricity is produced by the extraction of electrons from an atom. The energies which are used to produce an electricity are (i) Friction (ii) Light (iii) Heat (iv) Pressure (v) Chemical Action (vi) magnetism.

1.3.1. Electricity due to friction

Due to the friction of two material, the electrons come out from one material to join with the other material. The material which looses the electron gets +ve charge and the material attracted the electron gets --ve charge. This type of electricity is called Static Electricity.

Ex. Materials like Glass, Rubber, Wax, Silk, Reyon, Nylon.

1.3.2 Electricity due to light

When the light falls on the material, the electrons emitted from the surface and producing the flow of current. For this purpose Photocell is used. Photo cell is used to convert the light energy into current. The materials which emitted electron due to the light fall on the surface are "photo sensitive metal."

Ex. Sodium, Potassium, Lithium, Cesium.

1.3.3 Electricity due to Pressure

Electrons in the outermost orbit of an atom is extracted due to the pressure applied to an atom and the electricity is produced. This is called "Piezo Electricity". In a telephone, diapharam is pressured by the sound waves. Because of this, Electric Waves are produced depending upon the pressure of sound waves.

1.3.4 Electricity due to Heat

The ends of two metal rods are joined together and this joined part is heating. Due to this the part opposite to the heated place is connected by a Galvanometer and the Electricity is known as the deflection of the pointer.

In the same way, two metal plates are joined together and is heating, for the purpose of producing electricity. This type is called "Thermo Coupling Method."

For the above four methods, sufficient electricity is not produced and the energy of electricity is also less. Because, the other two methods are used to produce the sufficient electricity with high energy.

1.3.5.Electricity due to chemical action

By using the method of chemical action, electrons are extracted from an atom and producing electricity. This method is used for producing electricity in primary and secondary cells.

Primary cell is used in torch light and the secondary cell is used in cars, motorcycles etc.

1.3.6. Electricity due to Magnetism

In this method Electrons are extracted from an atom due to magnetism. For this purpose generators are used. In generator the energized electricity is produced by the magnetic poles and armature winding.

In our country the requirement of electricity is produced in all the above methods.

In this we have to study about all the power generating stations in Tamilnadu and how the electricity is produced.

1.4. POWER GENERATING PLANTS

Today, there are seven power generating stations are available in our country. By this, approximately 7000 MW current is produced in our country

Types of Power Generating Plants

1. Hydro Electric Power Plant
2. Thermal Power Plant
3. Atomic Power Plant
4. Gas Power Plant
5. Diesel Power Plant
6. Solar Power Plant
7. Wind-Mill Power Plant

1.4.1. Hydro Electric Power Plant

From the water reservoir, the water is taken through the jaint tubes to the water turbine. For the rotation of turbine, the kinetic energy of water is converted into mechanical energy and is converted into electrical energy by the using of generators.

This type of plant is placed in TamilNadu at Mettur, Kunda, Bicara, Suruliyaru & Kadamparai.

1.4.2. Thermal Power Plant

Chemical energy is converted into heat energy by burning of coal or lignite in boiler plant. Water in the boiler is converted into steam by heat energy. This steam is flowing through the steam turbine which is connected to the generator and this energy is converted into mechanical energy by the rotation of turbine. The mechanical energy is again converted into electrical energy by the use of generator.

This type of plant is placed in TamilNadu at Ennore. (Chennai), Neyvelli, Tuticorin and Mettur.

Thermal Power Plants play a major role for the requirements of electricity in Tamilnadu

1.4.3. Atomic Power Plant

By the diffusion of an atom of Uranium or Thorium, to getting more heat. Based on this principle the atomic power plant is working. The heat energy is produced and is used to rotate the steam turbine and this energy is converted into mechanical energy. The generator converts the mechanical energy into electrical energy.

This plant is placed in Kalpakkam near Chennai and Tharapur in Rajastan State. Leakage of gas by this plant may cause pollution and affect the health of the people.

1.4.4. Gas Power Plant

For the rotation of turbine, the underground gas is used. The generator which is connected to the turbine produces the electricity. This plant is placed in Ramanathapuram and Kuthalam.

1.4.5 Diesel Power Plant

This type of plant is used for the place where the continuous requirements of electricity is needed. i.e. in big factories and refrigeration works. The electricity is produced by the generator which is connected to the big diesel engine.

Depending upon the requirements, different capacities of small or large diesel generators are used in hotels, hospitals, Jewelleryshops, cinema theatres, shipyards etc.

1.4.6 Solar Power Plant

For the purpose of minimum production of electricity, this type of plant is placed on the roof of the buildings. In this plant, the electricity is produced by using sun-rays. This is used in houses, hotels, hospitals, traffic signal lights etc.

1.4.7 Wind-Mill Power Plant

The Wind-Mill is rotated by heavy speed of wind. The electricity is produced by the generator which is operated by the wind-mill. This plant is placed at Kayathar in Nellai District and placed at Palladam-Udumalai Pettai Road in Coimbatore District.

1.5. ELECTRICAL SAFETY AND PRECAUTIONS

A man who works in the electrical department must be carefully handled the work without any damage to the equipments and also workers. Because accident may occur heavy loss. He must know all the operations of electrical equipments. Otherwise wrongly handled the equipments will cause heavy loss. Electrical accident may occur only due to carelessness. Due to this, workers will get injured, damaged equipments will cause loss, because the work was stopped. To avoid this, electrical workers must follow the rules and regulations when working.

1.5.1. Electrical Precautions

- Before he use the equipments, he must know the operation of that equipments. Electrical connections are made properly according to the definition.
- Only the trained and efficient person is allowed to operate, testing and repairing the machine.
- A person works in the electric post and tower post must wear the safety belt and glouse.
- If the situation is occur, the man who works on the ladder, the other persons helps to capture the ladder for safety. If it is essential, then the post and the ladder must be tied with a rope for safety purpose.
- After earthing the overhead lines by discharge rod, then the work will continue.
- Check the condition of all the hand tools, supply wires operated in current and also to check the earth wire is in good condition.
- To remove the plug point pin from the socket by the proper way, cannot pulling the wire.
- After the main switch is off, fuse wire must be changed. Depending upon the load, sufficient ampere fuse wire is provided.
- All the hand tools used in electrical works must be insulated.
- During made up of wiring, switch is always connected in phase line.
- If any fault occur in the electrical equipment in the houses, it will be checked and repaired after the equipment is totally disconnected from the supply.
- Ex. Fan, Grinder, Mixie etc.
- Safety equipments existing in the electrical circuit is not removed due to any reasons.
- If fire occurs in the electrical circuit, immediately the main switch is turned to off position. For extinguishing the fire any one of the following i.e. carbon-di-oxide extinguisher, dry power extinguisher can be used. Soda acid extinguisher is not used at any cost. Water is not used to extinguish the fire because it conducts electricity and cause severe accident.
- If any person getting electric shock because of touch the electric wire, immediately the supply is disconnected. The person is removed from the wire by the use of dry stick, dry wooden plank and dry cloth etc.

- When the battery is charging in a room, the room must be in a condition to get free air. To avoid dangerous situation, no fire is available near the battery.
- For producing electrolyte, water is not added to acid. Hydrochloric acid is added in the water by drop by drop.
- Swetting hand is not used to switch ON or work on the electric supply. If the person has swetting on the hand continuously, he must wear the glouse.
- The switch is in OFF position. Before to turn ON the switch to check if anybody is working in that electrical circuit.

The above points are used for electrical workers and they can be work without any damage.

1.5.2. Electrical Shock

Human body has a electrical conducting property. Without swetting of human body the resistance is approximately 80000Ω(Ohms) and during swetting resistance of the human body is approximately 1000Ω(Ohms). If we touch the current carrying conductor, the current is conducted through our body to earth. So the electrical circuit is closed and we get electric shock due to this, nervous structure, heart, lungs and brain are affected. If the current is heavy, death may occur. Therefore we must know, even though the current is essential,if it is used wrongly, it will cause heavy loss. i.e. death and economical loss.

To prevent this electrical shock, we know about the methods of preventive cares and protective methods for safety precautions.

1.5.3. Preventive method to avoid electric shock

- The Operation of electrical equipments must be known.
- Damaged wire is not used for wiring works or electrical connection.
- The Electrical Instruments used for connections (i.e. switch,plug,pushings) is not having any scratch or breakable, If it is in such a way that it must be replaced by new one.
- Requirement hand Tools are used in proper way
- The hand tools are insulated essentially.
- Proper earthing is provided.
- If the supply is taken from the socket, only the plug top is used. To avoid, the supply is taken by inserting the wire with stick in the socket.
- Depending upon the load, rated ampere fuse wire is used.
- The electrical equipment is repaired after the main switch is off.
- For any reason do not operate by overcoming the safety rules.

The electrical shock may be avoided for following the above methods in a proper way.

1.5.4. First Aid

Due to unavoidable reason, a man affects from sudden accident occur or electric shock, he may be treated by first aid method to protect from death, before taken into hospital.

When a person is affected by current shock, first the circuit should be disconnected. If the main switch is nearer put off the switch or using any wooden stick we could disconnect the person from circuit. Then immediately send him to consult a doctor.

If the affected person lose his consciousness, but breathing is normal then looser his clothes and apply cold water on his face and keep him in open air.

If the person does not breath then immediately arrange artificial method of breathing clean his mouth and keep it open.

There are three methods of artificial breathing.

HOLGER NELSON METHOD

In this method the victim should be kept in the bed facing the ground. Fold his hands and keep it in the backside of his head, the helper sitting at his head should massage his back using both hands. This is done with in two seconds.

Mouth to mouth

In this method the helper pushes air by keeping his mouth on the victim's mouth.By closing his nose then the air fill lungs. So the victim gets artificial respiration.

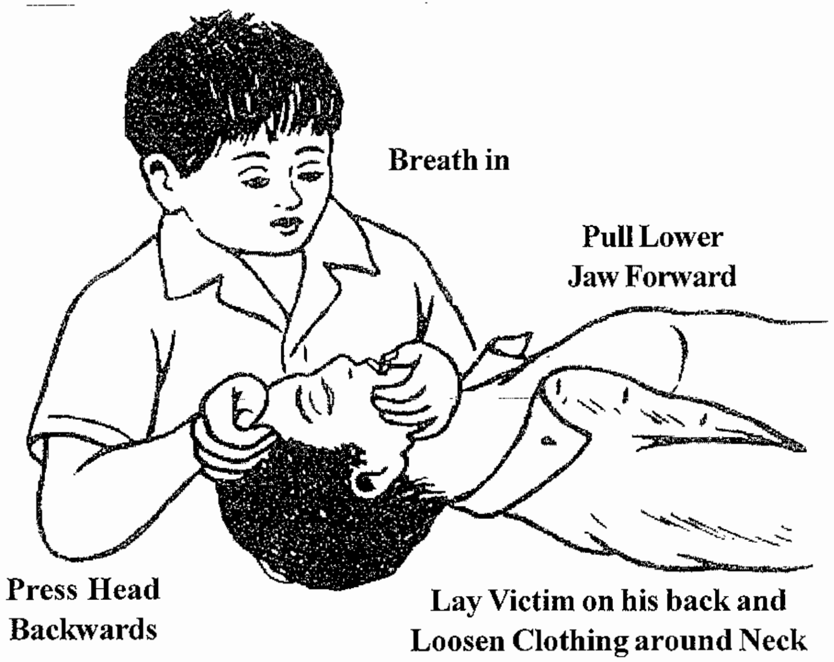

Mouth to Mouth Resuscitation

Procedure - 1

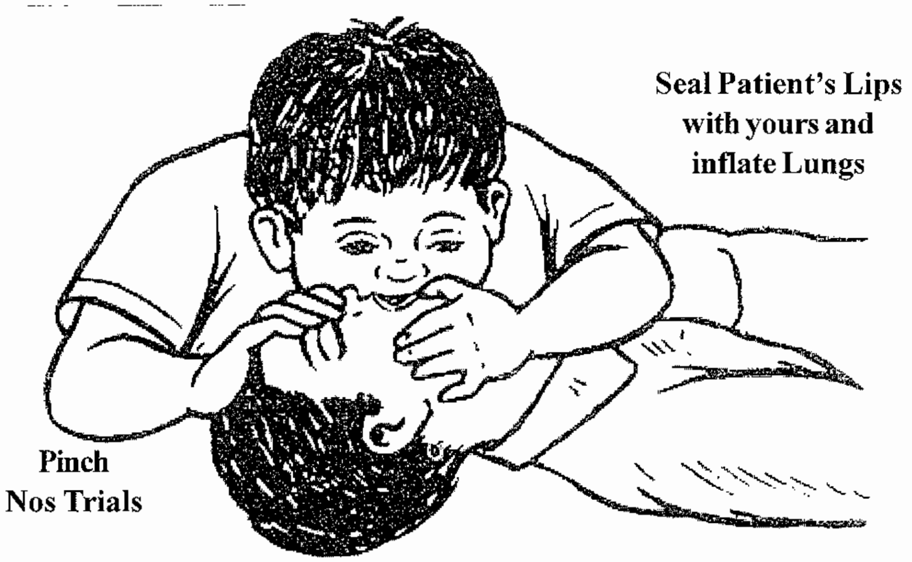

Blow into lungs (12 times every minute)
avoid patient's exhaled air

Mouth to Mouth Resuscitation

Procedure - 2

MOUTH TO MOUTH METHOD

1. Put the victim on a bed-sheet.
2. If his tongue is folded correct it.
3. Using both hands catch his forhead and chin.
4. For respiration place your mouth over the mouth of the victim and send an to his body for respination.

Through Nose

In this method the helper send air through victim's nose. By closing his mouth the air is blown in his nose till the heart of the victim rises by this way the victim gets artificial respiration. For a child the air blown is half the heart level, compared to adult.

Questions

Part - A

Choose the Correct Answer

1. The smallest particle of an element is known as,

   a) Atom b) molecule c) Nucleous d) Electron.

2. The Atom is composed of,

   a) Electrons only b) Protons only c) Neutrons only d) Electrons, proton, Neutrons

3. In case of Electric fire use,

   a) Dry sand b) wet sand c) Corbon powder d) Water

4. The number of Electrons in an Atom are equal to

   a) equal to neutrons b) Equal to protons
   c) Equal to the atomic number of the substance d) None of this.

5. The Supply volltage used for domestic purpose is,

   a) 110 - 120 V b) 120 -130 V c) 220 - 230 V d) 400 - 440 V

6. Switch always be installed on

   a) neutral wire b) earth wire c) Phase wire d) none of the above

7. Without swetting of human body of the resistance is approximately.

   a) 80 K Ω b) 40 KΩ c) 10 KΩ d) None of this.

Part - B

Answer the following questions in one word

1. What are the main particles in an Atom?
2. What is Nucleous?
3. Neutron have which charge?
4. Proton have which charge?
5. What charge does electrons have?
6. Should we throw water incase of the electric fire?
7. While a person is in contact with electric shock should be removed by pulling his arm?

Part - C

Answer the following questions in briefly

1. What is called Atom?
2. What preventive precautions should be taken to avoid electric shock?
3. What is Electricity?
4. What is current?
5. What are the different method of artificial repiration?
6. What are the methods used for production of Electricity?

Part - D

Answer the following questions in one page level

1. Explain the structure of Atom?
2. Explain the methods of prevent electric shock?
3. Explain the different types of First Aid?

Part - E

Answer the following questions in two page level

1. Explain the power generating methods?
2. Explain the Electrical safety and precautions?

2. MATERIALS USED FOR ELECTRICAL WORKS

INTRODUCTION

Generally the materials used for electrical works divided into three types. There are called Conductors, Insulators and Semiconductors. The materials which conduct the current from one place to other place are called conductors, the materials do not conduct current i.e. it resists the current are called Insulator and the materials which have half of the properties of these two are called semiconductors. i.e. It conducted only a very low value of current. For this purpose conductors and insulators are widely used in Electrical department where as semiconductors are used in Electronics department.

In this chapter, we have to study about the types and properties of conductors and insulators.

2.1. CONDUCTOR

What is called conductor? The wire which carries (Conducts) current from the supply point to the load is called conductors. The material is operated by using the current is called load. Eg. Fan, Radio, Iron box, Mixie, Grinder, Bulb etc. Generally all types of metals are used for conducting purpose, some metals permit easily to allow the current flow through it. This type of metal is called "Good Conductors".

2.1.1 Properties of conductor

- To conduct the current easily.
- Would have low resistance.
- Would have high tensile stress.
- More flexibility.
- It will not affected by the corrosion due to air (or) not affected by rain, heat.
- When a current is flowing through the conductor, it will get heated. Therefore it is not affected by heat.
- Easy to soldering.
- Cost is low and is easily available to buy it.

2.1.2 Types of Conductor

Conductors are classified into three types depending upon the conducting property with low resistance there are solid conductors, liquid conductors and gas conductors.

Solid Conductors

Silver, Copper, Brass, Aluminium, Tungsten, Nichrome, Zine Iron are called good conductors. There are converted into thin wire and thin rod or strap for the purpose of conduction.

We have to study about the metal is used for conduction and where there is used.

2.1.3 Liquid Conductors

The conductors in the form of liquids are called as Liquid Conductors. Mercury, Sulphuric Acid, Nitrate are some of the liquid conductors used in batteries. Mercury is used in high power vapour lamps and automatic circuit breakers.

2.1.4 Gas Conductors

Organ, Helium, Neon, Nitrogen are some of the gas conductors. They are used in gas discharge lamps at high temperature.

2.2. INSULATORS

Insulator is non-conducting material. i.e., it resists electricity. It has high resistance value, normally in Mega Ohms.

Properties

- It has high resistance and specific resistance.
- High di-electric strength.
- Good Mechanical strength.
- Withstands high temperature.
- May not get change in shape due to temperature.
- May not absorb water.
- Can be made to any shape.
- Can not get fire easily.

Classification of Insulators

Generally Insulators are classified into three types:

1. Hard Insulators

Ex. : Back lite, Porcelain, Wooden Plank, Glass, Mica, Ebonite

2. Soft Insulators

Ex. : Rubber, Poly-Vinyl Chloride, Varnish coated papers, Micanite, Pressphan paper

3. Liquid Insulators

Ex. : Mineral oil, Shellac, Varnish

2.2.1. Tools and their uses

For the betterment of our electrical works a number of minor and major tools are used. In this chapter we are going to learn such tools.

1. CUTTING PLIER:

In electrical tools cutting plier is the most important tool. It is used to cut the cables and to tighten them. The handles of the plier is, wrapped by rubber even to be used in current supply. It is also used to fix or remove screws.

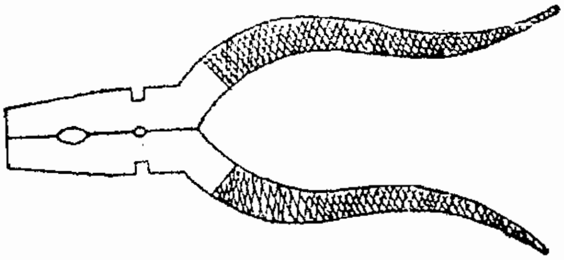

2. LONG NOSE PLIER

It is used to fix and remove screws in narrow gaps. It is widely used while repairing radios and speakers.

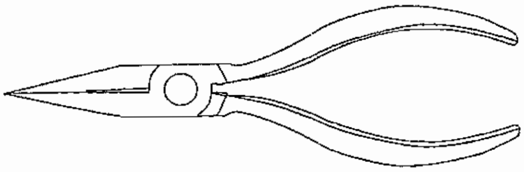

3. KNIFE

It is used to remove the insulation in electric cables. The handle of a knife is made up of wood or plastic. Its length is in four or five inches to keep easily in shirt pockets.

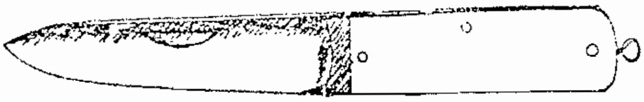

4. SCREW DRIVER

It is used to fix and tighten the screws. The point of a screw-driver should be flat to be fixed in the gap in the head of a screw. It is available in different sizes from 4.5 inches to 12 inches. It is named according to its length. Its handle is made up of wood or plastic. Wooden handles are better to be used for long period than plastic handled Screw Driver.

5. CONNECTING SCREW DRIVER

It is also a type of ScrewDriver. Its handle is made of plastic. It is available in small sizes. It is used to fix and tighten screws in joints, and poles. It is of 4.5 or 5 inches.

6. TESTER

It is the essential tool of a electrician. It is also like connecting screw Driver in size.

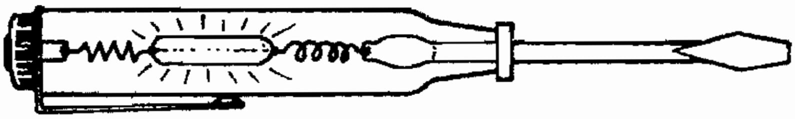

Its handle is also made up of slots. In its handle a visible pipe like part is fixed in it a neon bulb is fixed with a screw metal and there is a clip in its head. All these parts are connected using a cable. It is used to check current supply in electric circuits. If there is a current supply in the circuit the neon bulb glows.

7. POCKER

It has a sharp end. It is used to make holes to fix screws in electric boards.

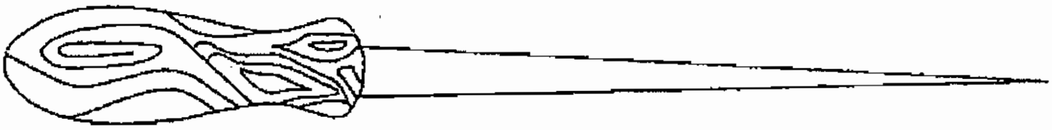

8. JUMPER

It is used to make holes on walls. It is available in 8 SWG or 6SWG sizes. Its handle is made up of iron. By hammering its handle, required holes are made by the sharp points.

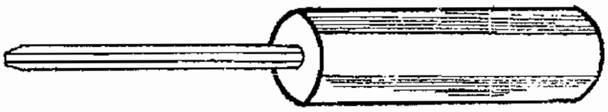

7. TUBE JUMPER

It is used to make holes on walls. But it is used to make holes between the walls to connect electric cables. One side of this jumper is like a saw. The hammer is used to make holes and rotate the jumper clockwise to make holes easily and quickly.

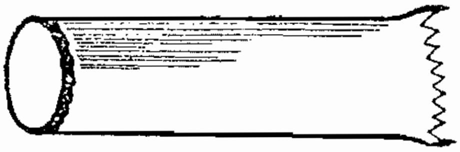

8. WOOD SAW

It is used to cut wooden boxes, sticks and round blocks for the required size.

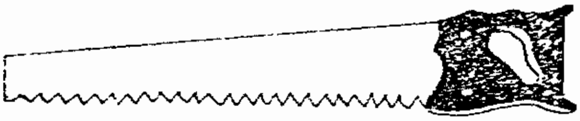

9. HACKSAW

It is used to cut PVC or metal pipes and metal frames. The frame of hack saw is made up of Iron and the handle is made up of wood. A clip is fixed in its other end to adjust the length.

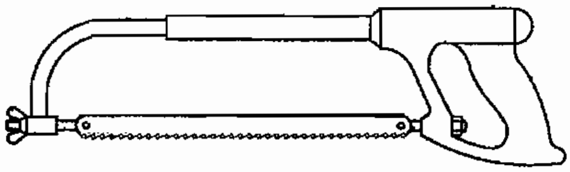

10. BALL PANE HAMMER

As its head is round shaped like a ball it is called so. Its head is made up of iron and handle is made up of wood. It is used to fix needles and bend iron rods. It is available in different weights.

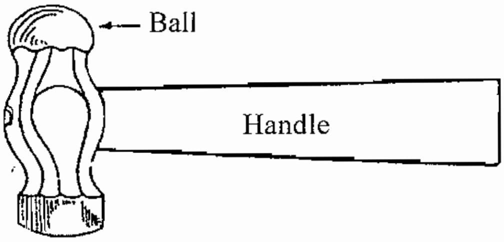

11. CLAWHAMMER

In this type of hammer of end is flat, the other bent and there is a claw in the end. It is used to remove nails and hammering the nails.

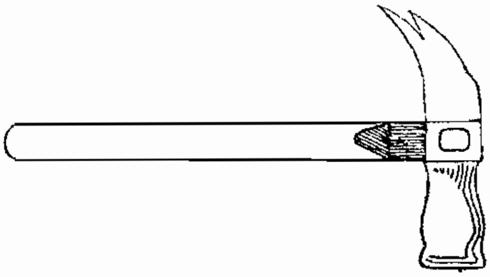

12. MALLET

It is fully made up of wood. It is mostly used for woodet works.

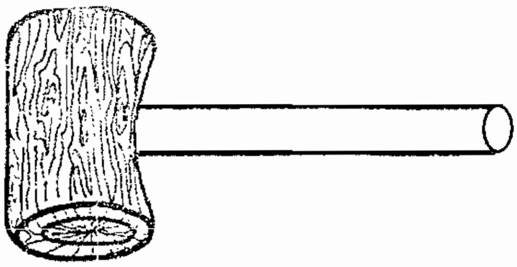

13. HAND DRILLING MACHINE

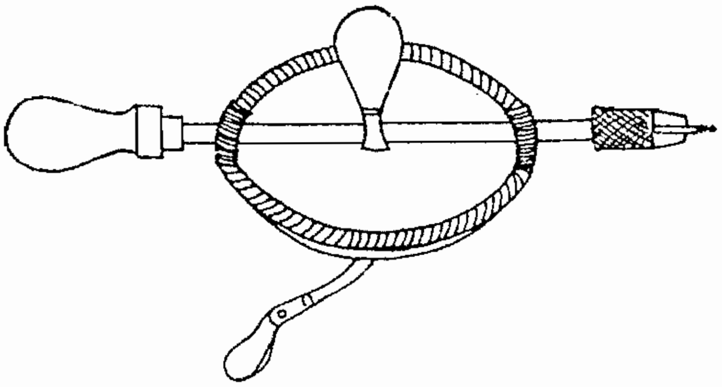

It is used to make holes in wooden materials. In one end of this machine a chuck is available to fix required drilling bit. Fixing it i wood by keeping the handle tightly, holes are made by rotating the cli

14. FILES

It is used to correct the size and smooth the upper part c metals. It is named according to the size and the rough surface fo smoothing other surface.

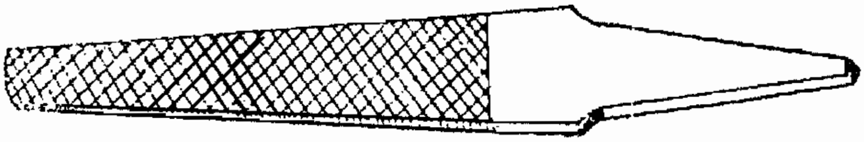

TRY SQUARE

It is used for measuring angles of 90: (Right angle) Measure-ments in mile metre are marked in its scale. It is used to measure 90 right angle accurately.

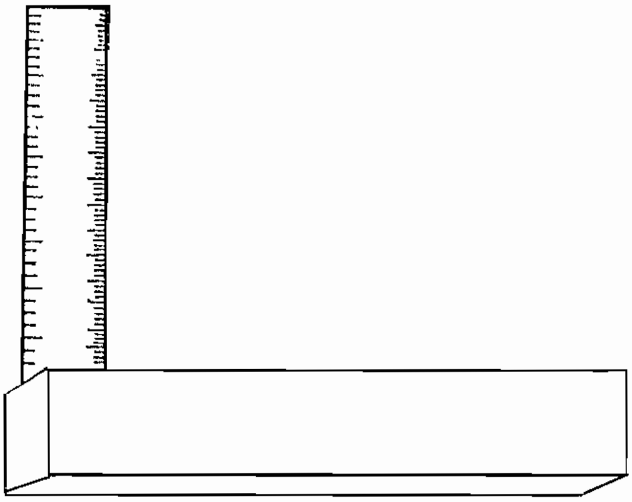

WIRE GAUGE PLATE

It is of round shape. It is used to measure the width of wires. Its unit is gauge. The wire is put into the hole in the centre of the Gauge to measure its width. Wires are available in gauge of 8 SWG, 12 SWG, 18 SWG.

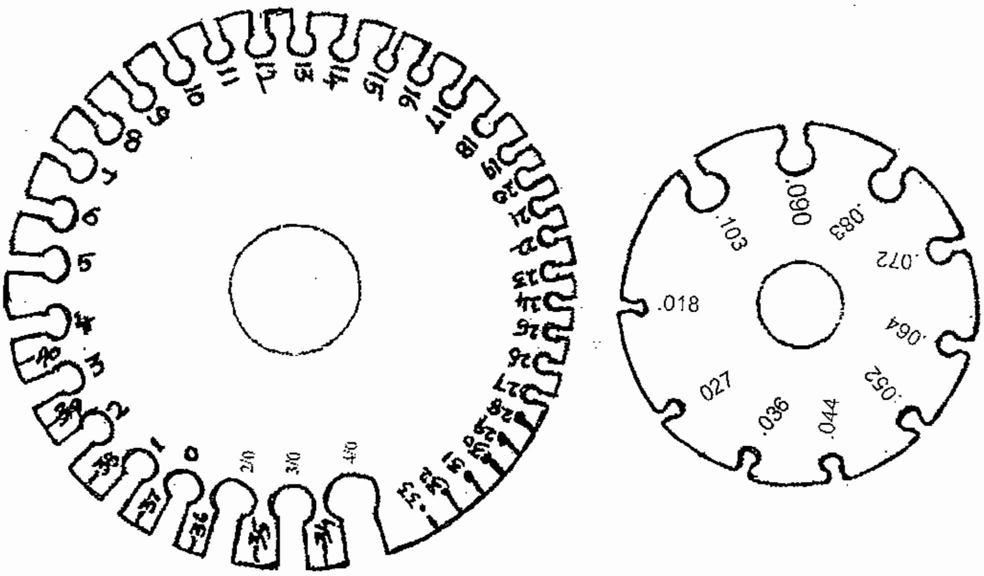

2.3 TYPE OF SWITCH

S.P.T Switch: This is a mechanical divice used for opening or closing an electrical circuit. Single pole switch is used for closing (or) opening one phase only most of the switches are turmbler type but, now a days flush type switches are used.

2.3.1 Intermediate switch : To control a light from more than two different places, the intermediate switch is used for example a long hall, corriders and passage ways with many doors etc.

2.3.2. Knife switch: Knife switch is made of Copper and is generally used in laboratories for switch boards. It has a long piece ofl copper strip hinged in one end and which can go into a copper socket at the other end. It has got an insulated handle and two terminals. Below the main some times there is additional small strip held by means of springs. The small strips makes contact to permits any number of control points.

2.3.3 Main Switch: Main switch is the one which controls the electrical supply for whole house (or) factory. These are also called as Iron clad switches. There are different types, Two pole and Three pole in the Two pole switch, their will be two fuse units, the neutrol one will have a link and the phase 1. will have the rated fuse wire. There is also an earth terminal. The Iron clad switch has a metalic cover which can be screwed out for changing the blown out fuse only. After putting of the switch. From the main switch leads are taken to the distribution box.

2.4 Fuse unit:

Function : A fuse in meant for protecting the circuit from damage if a short circuit developes some were in the wiring (or) in the connected appliances. Like a switch it instantly breaks the circuit and the flow of current in the circuit is interrupted at once. It does so automatically by melting off it self. A fuse in made of a metallic wire (tin, lead and Zinc alloy) having a low melting point and so life at any instant any excessive current passed through the circuit, its heat melts of the fuse. When the fuse blows it is a clear indication that something has gone wrong some were in the system. Every electrical circuit must therefore have a fuse of the correct rating as a protective device. Fuses are usally rated for 5 Amps, 10 Amps and 15 Amps

Types of fuses: Kitkate porceilin fuse unit, HRC fuse, Cartridge fuse.

2.4.1 Cartridge fuse: This type of fuse in mostly used in T.V, Radio, Record plier, Voltage stabiliser, etc. They are in the shape of a capsule in which the fuse wire is stretched in a gas tube with metalic caps at each end. The blown of fuse wire can be seen stright away. This type of fuse is easy to replace by simply pressing it into its seat.

2.4.2. Kit Kat type fuse : These are the ones mostly used in domestic installations. This fuse consists of a proclaim base having two fixed contacts, for connecting the incoming and outgoing cables. The bottom part of the fuse is called the base and the top is called the fuse carrier. The line and a load wires are connected in the base terminals and the carrier is provided with a fuse. The base fixed but the carrier is removable.

2.5 Wall socket: It has ready to give supply to the soldering iron, Table Fan, Radio, T.V and other electrical appliances. It has two pin, 3 pin and 5 pin socket for connecting plus. it is usually rated for 5 Amps and 15 Amps.

2.6 Ceiling rose : Ceiling fan (or) Tube lamps are get supply from this ceiling rose. It has two or Three brozz plates with connecting terminal screws.

Types of Ceiling rose : Two plate ceiling rose, Three plate ceiling rose.

Questions

Part - A

I. Choose the Correct Answer

1. .... is the best conductor.

   a) gold b) Silver c) Copper d) Aluminium

2. MICA is better.

   a) Conductor b) Insulator c) Semiconductor d) None of these.

3. Intermediate switch is used to control a lamp from

   a) One place b) more than two places
   c) individual controlling d) None of these.

4. Ceiling rose is used to take supply for

   a) Portable equipment b) florocent tube
   c) heater of 2000 watts d) an electric iron.

5. Which tool is used for pulling, twisting, cutting and wrapping purpose?

   a) screw driver b) Insulated combination plier c) side cutter d) gas plier

6) Which tool is used for hammering the nail?

   a) Plier b) Screw driver c) mallet d) Hammer.

7) The tool used for measuring the size of the conductor wire is

a) Try square b) SWG c) Wooden scale d) None of these.

Part - B

II. Answer the following questions in one word

1) Which Switch is used to control a bell point?
2) Of which meterial these ceiling rose are made?
3) What are the rating of single way switch?
4) How the switches are connected with load?
5) What is P.V.C. stands for?
6) Give example of safety accessories?
7) Where the two way switches are used generally?

Part - C

III. Answer the following questions in briefly

1) What is conductor?

2) What is insulator?

3) What are semi conductors?

4) Give examples for conductors?

5) Give examples for Insulators?

6) Give examples for Hand tools?

Part - D

IV. Answer the following questions in one page level

1) Explain the classification of conductors?

2) Explain the properties of Insulators?

3) Write short notes on Tester, cutting plier?

Part - E

V. Answer the following questions in two page level

1) Explain the properties of conductors and Insulators?

2) Explain the types of Hand tool?

3. ELECTRICAL TERMS AND DC CIRCUITS

3.1. INTRODUCION

Generally says, the current flows form positive (+) terminal to negative (-) terminal. But electrons flow from negative terminal to positive terminal. The flow of electron is called current. Related to this, we study about some of the electrical terms.

3.1.1. Electrical Current

The continous flow of free electrons constitues an electric current. The unit of current is amper (A) and is measured by Ammeter. It is denoted by the letter "I".

Amphere

If one columb charge cross over the area of cross section of the conductor per one second then the value of current flows through the conductor is called 'One Ampere'.

One Coulomb

$2\pi \times 10^{18}$ number of electrons is mentioned as one coulomb.

3.1.2. Voltage

To create the current flow in a conductor, i.e., the electrical pressure which is used to move the electrons is called voltage. It is denoted by the letter 'V'. The unit of voltage is 'Volt' and is measured by voltmeter.

One Volt

One volt means the force to move one coulomb of electrons in one second.

3.1.3. Resistance

The property of conductor which opposes the flow of current through it is called resistance. It is denoted by the letter 'R'. The unit of resistance is ohms (Ω) and is measured by Ohm meter.

Ohm

When a conductor having 1V potential between the two end points, one ampere current will flowing through the conductor and the resistance value of the conductor is 1 Ohm (Ω).

3.1.4. Electro Motive Force (EMF)

In a circuit, a force is used to conduct the electrons from one point to another point is called Electro Motive Force. The unit of EMF is volt.

Electro Motive Force = Potential difference + Voltage drop

i.e, (EMF = PD + Voltage drop)

3.1.5 Potential Difference

It is represented by, the potential difference between any two points in the electrical circuit. Shortly it is called PD and the Unit is Volt.

3.1.6. Electric Power

Power is defined as the product of voltage and current. Unit of power is watts. The energy absorbed by an appliance in one hour is called the energy consummed by the appliance. It's unit is watt and denoted by the letter "P."

P	=	V x I watts
Electric work Q	=	P x t watt hour
one killo watt hour	=	1 Unit

3.1.7. Law of Resistance

The resistance of a conductor in a circuit depends upon the following states.

- It depends upon the material.
- Directly proportional to the length of the conductor.
- Inversely proportional to the area of the cross-section of the conductor.
- I t also depends upon the temperature of the conductor.

Resistance calculation

$$\text{Resistance} = \frac{\text{Specific resistance x length}}{\text{Area of the cross-section}}$$

$R = \rho l / a$

R - resistance - ohms

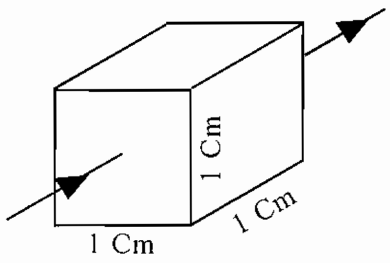

ρ - Specific resistance - Ohm meter

L - Length of the conductor - meter

A - Area of the cross-section of a conductor – Sq.m

3.1.8 Specific Resistance

The resistance that is offered by one cubic cm material is called specific resistance.

The following table shows the specific resistance of materials

Materials		Specific resistance is ohm - meter
Gold	-	2.42×10^{-8}
Silver	-	1.63×10^{-8}
Copper	-	1.724×10^{-8}
Aluminium	-	2.83×10^{-8}
Rubber	-	8×10^{7}
Glass	-	10×10^{11}

Example 1

1 Cm^2 cross section, 50 m long copper conductor has specific resistance 1.72×10^{-8} ohm-cm find the resistance.

Solution

Copper conductor length = L = 50m

i.e. L = 50 x 100 cm

Cross Section (a) = 1 cm^2

Specific resistance = $1.72 \times 10^{-8}\ \Omega$ cm

Resistance = R = $\frac{\rho L}{a}$

$= \frac{1.72 \times 10^{-8} \times 50 \times 100}{1}$

= 0.0086 Ohm

Resistance R = 0.0086 Ω

Example 2

Area of cross section of the Aluminium conductor is 0.009 sq.cm .Specific resistance is 2.69×10^{-8} ohm-meter. Potential difference between the end points of Aluminium conductor (PD) is 20v. If 2A current is flowing through this, what is the length of the conductor?

Area of the cross-section (a) = 0.009 cm^2

= $0.009 \times 10^{-4}\ m^2$

Specific Resistance (ρ) = 2.69×10^{-8} ohm-meter

Potential difference (V) = 20 V

Current (I) = 2 A

Resistance (R) = V/I = 20/2 = 10 Ω

$$R = \frac{\rho L}{a}$$

Therefore $L = \frac{Ra}{\rho} = \frac{10 \times 0.009 \times 10^{-4}}{2.69 \times 10^{-8}}$

= 334.5m

3.2. CONDUCTANCE

Conductance is reciprocal of resistance whereas resistance of a conductor measure the opposition which offers to the flow of current, hence the conductance measures the inducement, which offers to flow of current. Its unit is Mho and denoted by the letter G.

Conductance G = 1/R Mho (℧)

Generally the materials are classified by its conductance as they are

1. Conductor
2. Insulator
3. Semi conductor

1. Conductor

Conductor means the material, which should allow current flow through it. All matters are conductors. Silver, Copper and Aluminium are few the good conductors.

2. Insulator

Insulator means these substances which totally resist the flow of current through it. This type of substances are used in electrical appliances as Insulator.

Ex : Glass, mica, Asbestos, paper, wood, rubber, Porcelin, Plastic, dry cloth, backlite, PVC.

3. Semi Conductors

The material whose conductivity lie in between conductor and Insulator is called semi conductor. Ex. Germanium, Silicon.

3.3. TEMPERATURE CO-EFFICIENT OF RESISTANCE

The difference in Resistance while increasing temperature from 0° to 1^{0}c is called temperature co-efficient of resistance.

A conduct the conductor resistance increases to R_t ohm

Then the difference in the resistance

$\Delta R \quad = \quad R_t - R_o$ Ohm

ΔR depends

1. directly on its initial resistance

2. directly on the rise in temperature

3. on the nature of the material of the conductor

or $R_t - R_o \quad \alpha \quad R \times t$

where t is the rise in temperature

or $R_t - R_o = \alpha R_0 t$

where α (alpha) is constant and known as the temperature coefficient of resistance of conductor.

from the above equation

$$\alpha = \frac{R_t - R_0}{R_0 t}$$

If R_0, $= 1\Omega$ $t = 1^0c$ then

$$\alpha = R_t - R_0$$

Hence the temperature coefficient of a material may be defined as the increase in resistance per ^0C rise is temperature

From ex. we find that $R_t = R_o (1 + \alpha t)$

Example

Find the resistance of a copper conductor resistance at 25°c where the conductor resistance at 0°c is 150 Ω and temperature coefficient is 0.0040 per ^0C.

Solution :

Temperature coefficient copper = 0.0040 per ^0C

At 0°c, resistance = 150 Ω

Therefore $R_t = Ro (1 + \alpha t)$

$= 150 (1 + 0.004 \times 25)$

$= 150 (1 + 0.1)$

$= 150 (1.1)$

$= 165\ \Omega$

therefore resistance at 25°c in 165 Ω

Effect of temperature on resistance

The effect of rise in temperature is

1. The resistance increase when temperature increases in metal like copper and iron, from this we can understand that pure metals have positive temperature co-efficient.

2. In alloys like magnesium and Eureka resistance increase is relatively small with increase in temperature.

3. In Electrolyte, Insulators, mica, glass and rubber resistance decreases with increase is temperature. Hence they have negative temperature - coefficient of resistance.

3.4. OHM'S LAW

A relationship was derived by the scientist Ohm, between the current, voltage and resistance of the circuit. It says,

"At a constant temperature, the current flowing through the circuit is directly proportional to the voltage and inversely proportional to the resistance".

$$\text{Current} = \frac{\text{Voltage}}{\text{Resistance}}$$

ie $I = V/R$

$R = V / I$

$V = I \times R$

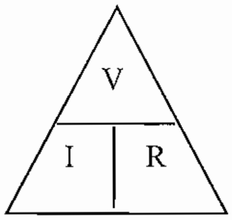

When the resistance of a circuit is constant, if the voltage increases the current increases and the voltage decreases the current decreases.

If any two of the three values (I, V, R) are known, the third value can be easily calculated.

Let us see some problems based on the above:

Problems

1. The supply voltage of the circuit is 240 V and the resistance value is 12 ohms. Calculate the current flowing through this circuit.

   Voltage (V) = 240 volts

   Resistance (R) = 12 ohms

   Current (I) = ?

   According to ohm's law,

   $I = V/R = 240/12 = 20$ A.

2. The supply voltage of the circuit is 230 V. If 10 Amps current is flowing through this circuit , calculate the resistance value of the circuit.

   Voltage (V) = 230 volts

   Current (I) = 10 A

   Resistance (R) = ?

According to ohm's law,

R = V/I = 230/10 = 23 Ohms.

3. Find out the voltage of the circuit when 6 A current is flowing through the circuit. Resistance of the circuit is 40 Ohms.

Current (I) = 6 A

Resistance (R) = 40 Ohms

Voltage (V) = ?

According to ohm's law,

V = I x R = 6 x 40 = 240 V.

3.5 ELECTRICAL CIRCUITS

The circuit is defined as, the current flows from the supply points through the load to complete Path. In this chapter, we have to study about the types of electrical circuit. There are called (1) Closed circuit. (2)Open circuit. (3). Short circuit.

1. Closed Circuit

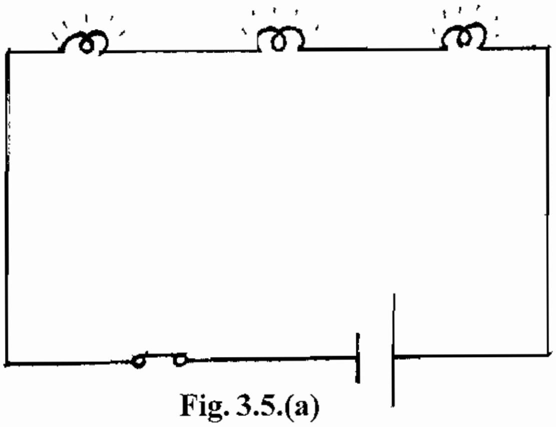

Fig. 3.5.(a)

When a load is connected between two terminals of an electrical supply in such away, that the current should pass through the load is said to be closed circuit.

2. Open circuit

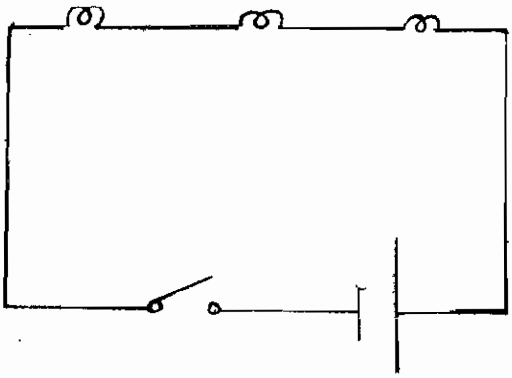

In a circuit, if there is no way to the flow of current due to disconnection of wire or if the switch is in OFF state, then the circuit is said to be open circuit.

3. Short circuit

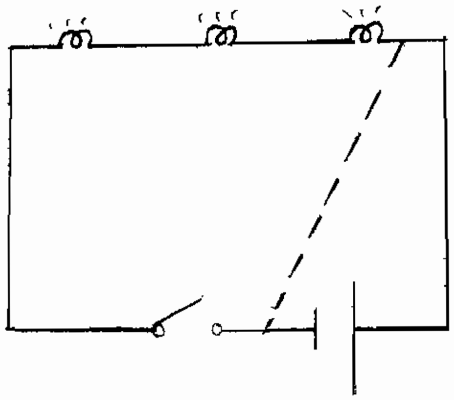

Fig. 3.5. (c)

The wires contact each other when there are connected in supply, the short circuit will occurs ie .two terminals of the supply is connected directly without the load the current flow of the circuit is infinite because it has no resistance.

Leakage

When any wire in the electrical connection may contact the body of a material, current leakage will occurs. In this conduction, if we touch the electrical equipment we get shock

Classification of electric circuit

1. Series Circuit
2. Parallel circuit
3. Series Parallel circuit
4. Mesh or Network circuit

3.6. SERIES CIRCUIT

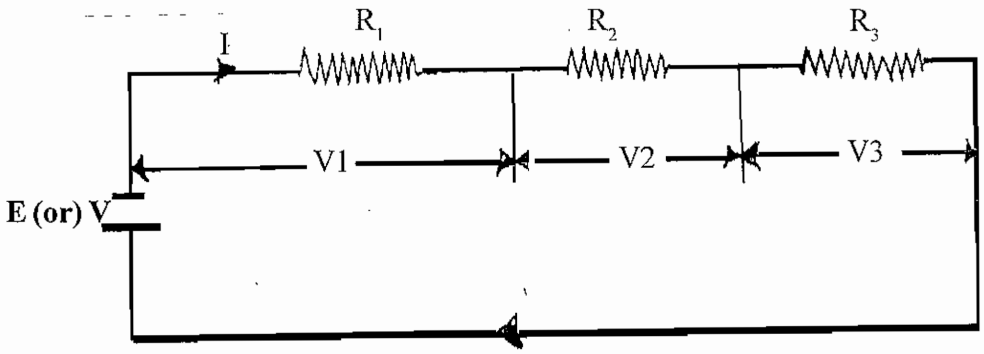

Fig. 3.6

When resistors are connected as in fig. so that the same current passes through all of them, they are said to be in series.

Here the resistors R_1, R_2, R_3 are connected in series with each other.

(i.e.) R_1 is connected with R_2, R_2 is connected with R_3 and R_3 is connected with R1 through a battery supply. The current flow is in same direction (i.e. one direction)

'I' ampere current flows in all three resistors

Each resistor has a voltage drop across it as given by Ohms law. Thus

$V_1 = IR_1$, $V_2 = IR_2$, $V_3 = IR_3$

The total drop in three resistors put together is

$$V = V_1 + V_2 + V_3$$

$$= I(R_1 + R_2 + R_3)$$

$$\frac{V}{I} = R_1 + R_2 + R_3 \qquad \left[\frac{V}{I} = R\right]$$

Where $R = R_1 + R_2 + R_3$

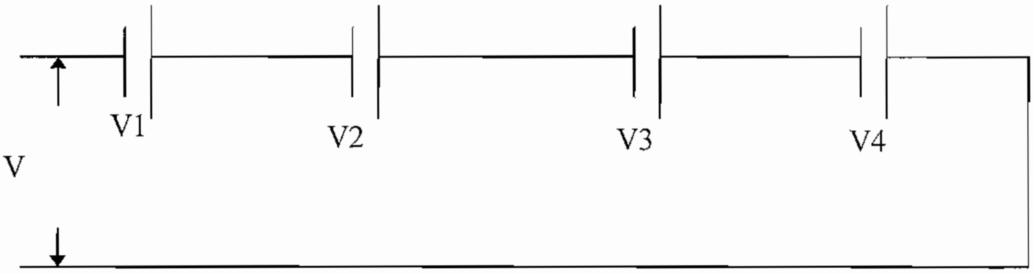

Fig. 3.6 (a)

When one or more batteries are connected in series with each other, the total potential difference is the sum of the individual ones.

In the above there are four batteries (V_1, V_2, V_3 and V_4) connected in series with each other.

Total potential difference (V) is

$$V = V_1 + V_2 + V_3 + V_4$$

According to Ohm's law

$$I = \frac{V}{R} \text{ and } V = IR$$

Here $V = V_1 + V_2 + V_3 + V_4$

The voltage drop in each resistor is

$V_1 = IR_1$

$V_2 = IR_2$

$V_3 = IR_3$

$V_4 = IR_4$

Where R_1, R_2, R_3 and R_4 are the internal resistance of each battery.

Therefore $R = R_1 + R_2 + R_3 + R_4$

Example

20Ω, 40Ω and 60Ω resistors are connected in series across a 240 V supply. Find out the total resistance of the circuit and current that flows through the circuit.

$R_1 = 20\Omega \quad R_2 = 40\Omega \quad R_3 = 60\Omega$

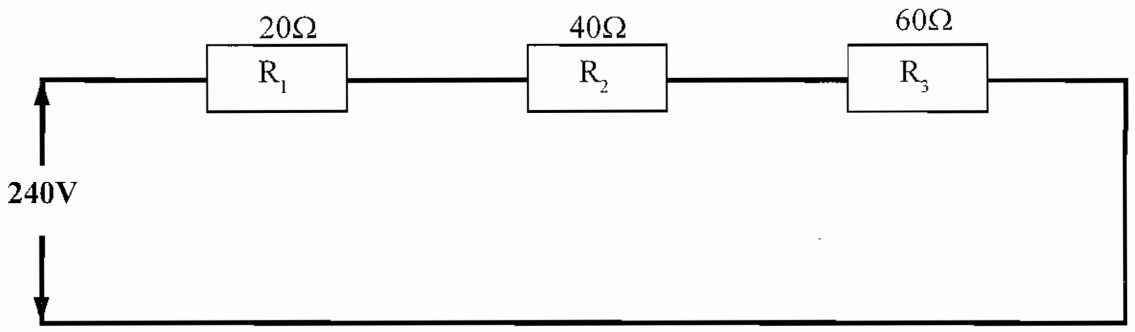

Fig.

Solution

$R_1 = 20, \quad R_2 = 40 \quad R_3 = 60$

$E = 240V,$

$R = ?, \quad I = ?$

According to ohms law

$$I = \frac{V}{R}$$

Where $R = R_1 + R_2 + R_3$

$R = 20 + 40 + 60 = 120\ \Omega$

$R = 120\ \Omega$

$$I = \frac{240}{120} = 2A$$

$I = 2A$

Example

Three resistors are connected in series. The total resistance (R) of the circuit is 60Ω. The first two resistors are 25 Ω and 15 Ω find out the third one.

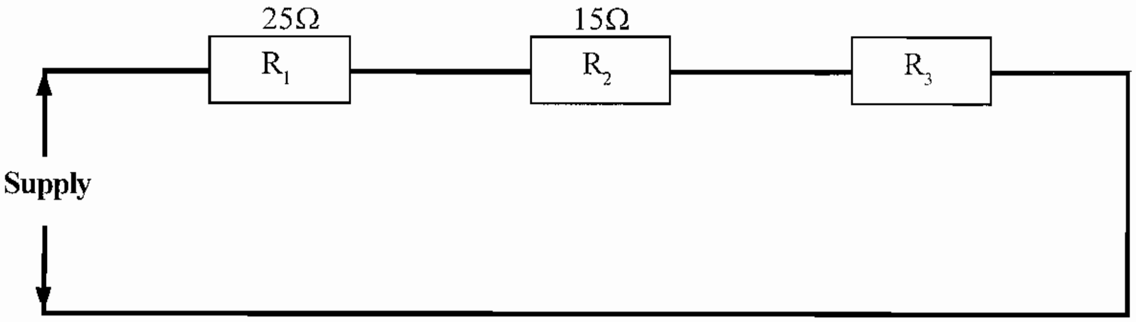

Solution

In a series total resistance (R) is

$R = R1 + R2 + R3$

$R_1 = 25\ \Omega, \quad R_T = 60\ \Omega$

$R_2 = 15$

$R_3 = ?$

$R_T = 25 + 15 + R3$

$60 = 25 + 15 + R3$

$R_3 = 60 - 40$

$R_3 = 20\ \Omega$

Important rules of a series circuit

1. In the series circuit, the current flows in one direction
2. Total Resistance

   $R = R_1 + R_2 + R_3 ...$
3. In a series circuit, the same current passes through all its resistors.
4. The total drop across the series circuit is the sum of voltage drop across each resistor.

   $V = V_1 + V_2 + V_3 ....$
5. The total series circuit will be inactive (there is no current flow) there is a fault in any one of its resistors.
6. This type of connection is used in serial sets (Decorative lamps)

3.7. RESISTANCE IN PARALLEL CIRCUIT

When resistors are connected across one another so that the same voltage is applied between the end points of each, then they are said to be in parallel. The current in each resistor is different and the current I taken from the supply is divided among the resistors.

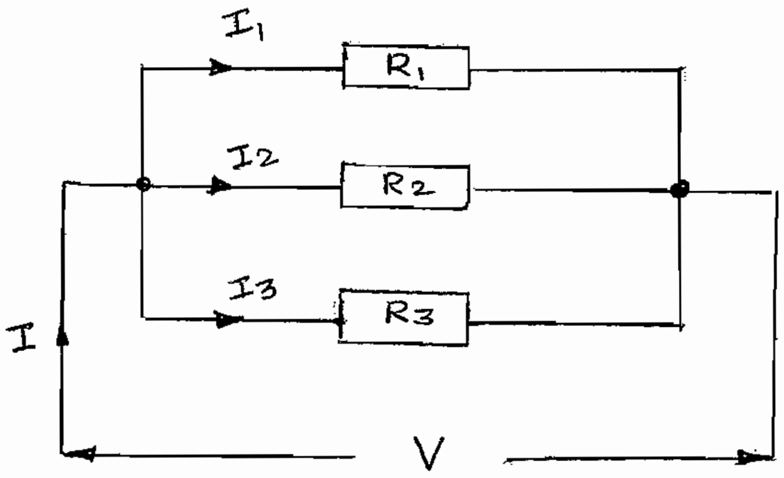

Fig. 3.7.

In parallel circuit total current (I) is equal to some of the currents I_1, I_2 and I_3.

$$I = I_1 + I_2 + I_3$$

According to Ohm's law, we can find the total resistance (R) as given below

$$I = \frac{V}{R}$$

$$I_1 = \frac{V}{R_1}$$

$$I_2 = \frac{V}{R_2}$$

$$I_3 = \frac{V}{R_3}$$

but $I = I_1 + I_2 + I_3$

$$I = \frac{V}{R_1} + \frac{V}{R_2} + \frac{V}{R_3}$$

$$I = V\left(\frac{1}{R_1} + \frac{1}{R_2} + \frac{1}{R_3}\right)$$

$$\frac{I}{V} = \frac{1}{R_1} + \frac{1}{R_2} + \frac{1}{R_3}, \therefore \frac{I}{V} = \frac{1}{R},$$

Where $\frac{1}{R} = \frac{1}{R_1} + \frac{1}{R_2} + \frac{1}{R_3}$

$$\frac{1}{R} = \frac{R_2R_3 + R_1R_3 + R_1R_2}{R_1R_2R_3}$$

$$R = \frac{R_1R_2R_3}{R_2R_3 + R_1R_3 + R_1R_2}$$

IMPORTANT RULES OF PARALLEL CIRCUIT

1. In the parallel circuit current flows though two or more paths at a junction. That is, it gets divided.
2. $I = I_1 + I_2 + I_3$ ....
3. The voltage drop is same in all resistors
4. If there are 3 restistors (R_1, R_2, R_3) in the circuit $R = \dfrac{R_1R_2R_3}{R_2R_3 + R_1R_3 + R_1R_2}$
5. If there is a fault in one resistor the other wto resistors will work. The current will be divided into two parts and will flow through the two resistors.

Example

6Ω and 4Ω resistors are connected in parallel through 240v supply. Find out the total resistance and current flows in it.

Solution

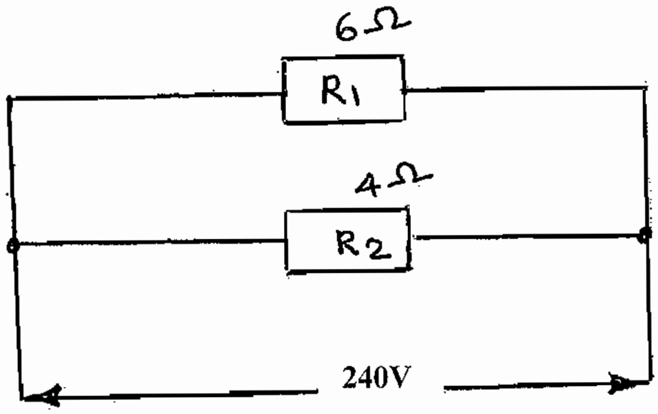

Fig.

$R_1 = 6\Omega$ $R_2 = 4\Omega$ $V = 240V$

$R = ?$

In parallel circuit

$$R = \frac{R_1R_2}{R_1+R_2} = \frac{6 \times 4}{6+4} = \frac{24}{10}$$

$$R = 2.4\ \Omega$$

According to ohm's law

$$I = \frac{V}{R} = \frac{240}{2.4} = 100A$$

$$I = 100\ Amp$$

Example

Three resistors 10Ω, 5Ω and 2Ω are connected in parallel.

The total current flowing in the circuit is 2A. Find out the total resistance and supply voltage of the circuit.

Solution

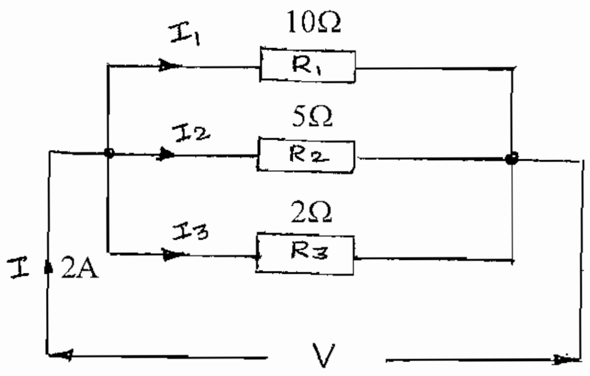

Fig.

$R_1 = 100\ \Omega$

$R_2 = 5\ \Omega$

$R_3 = 2\ \Omega$

$R = ?$ $\quad I = 2A \quad V = ?$

$$R = \frac{R_1R_2R_3}{R_2R_3 + R_1R_3 + R_1R_2}$$

$$= \frac{10 \times 5 \times 2}{(5 \times 2) + (2 \times 10) + (10 \times 5)}$$

$$= \frac{100}{10 + 20 + 50} = \frac{100}{80} = 1.25\ \Omega$$

$R = 1.25\ \Omega$

$V = IR$

$V = 2 \times 1.25 = 2.5$

$V = 2.5\ V$

3.8. RESISTANCE IN SERIES PARALLEL CIRCUIT

In this circuit one and more resistors connected in series with one more resistors connected in parallel. It is a combination of series and parallel circuit.

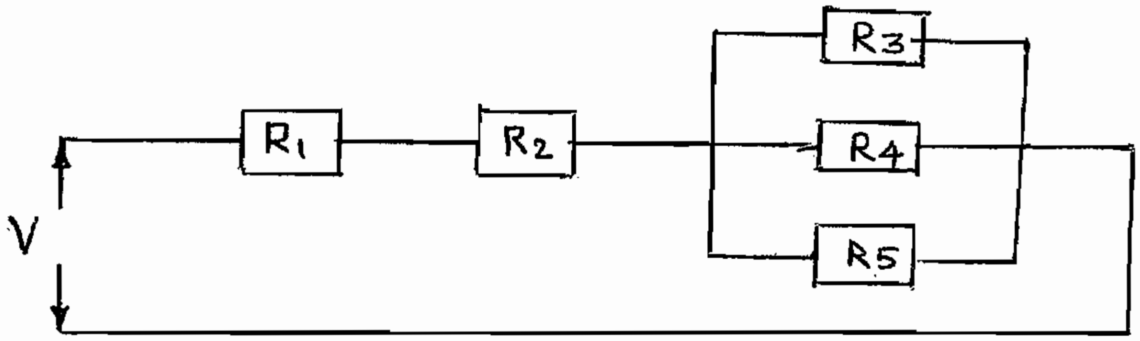

Fig. 3.8

In the above series parallel circuit, there are five resistors (R_1, R_2, R_3, R_4, R_5) placed in it among them R_1, R_2 are connected in series and R_3, R_4, R_5 are connected in parallel. The parallel resistors are connected in series with R_1 and R_2.

Here the total resistance (R) of the circuit is

$$R = R_1 + R_2 + \frac{R_3 \times R_4 \times R_5}{R_4R_5 + R_5R_3 + R_3R_4}$$

Example

10 Ω and 8 Ω resistors are connected in parallel with a 4 Ω resistor is series. Find out the total resistance of the series parallel circuit.

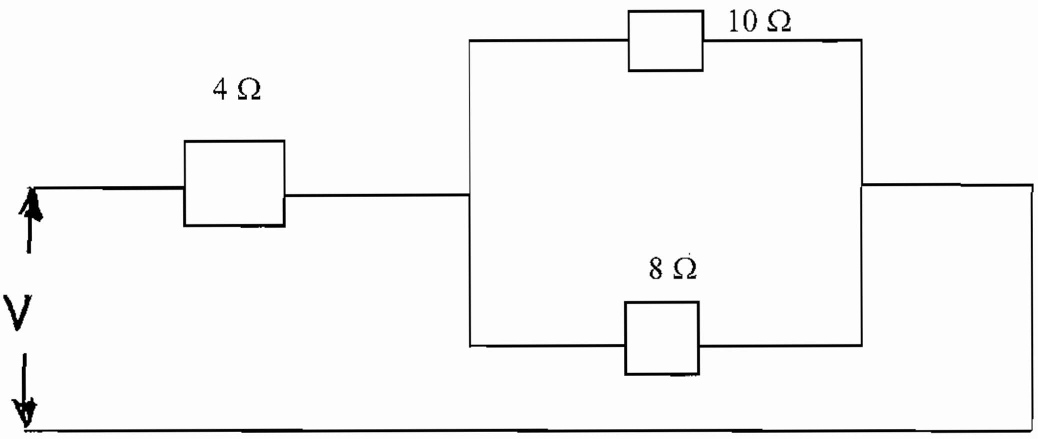

Fig.

Solution

Resistance of the parallel circuit

$$R_p = \frac{R_1R_2}{R_1 + R_2}$$

$$= \frac{10 \times 8}{10 + 8}$$

$$= \frac{80}{18}$$

$$= 4.44\ \Omega$$

Total resistance of the series parallel circuit

$$R = 4.44 + 4$$

$$= 8.44\ \Omega$$

Example

Three resistors 2, 4, and 6 ohm are connected in parallel. This parallel combination is connected in series with a resistor of 1.5 ohm. Find the current through in each resistor when the applied voltage is 10 V.

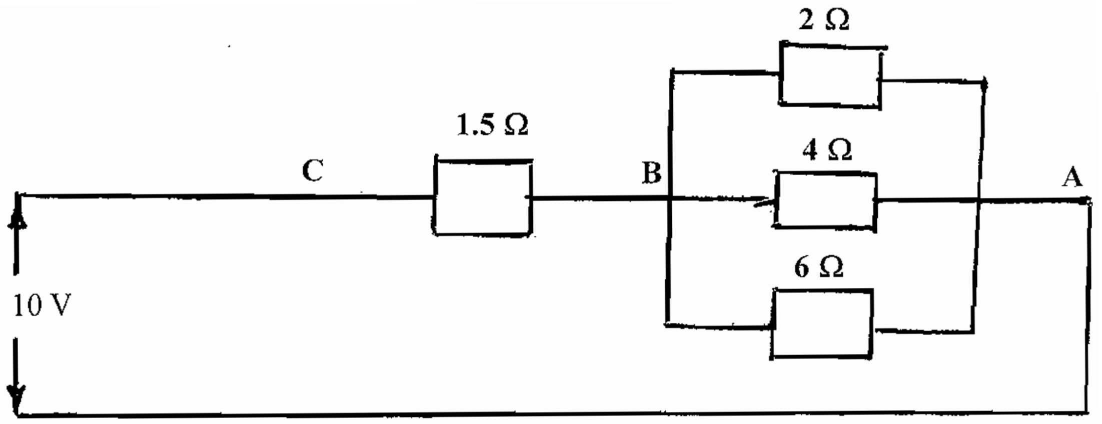

Fig.

Given Data

$R_1 = 2\ \Omega$

$R_2 = 4\ \Omega$

$R_3 = 6\ \Omega$

$R_4 = 1.5\ \Omega$

$V = 10$ Volts

To find current throgh in each resistors

Solution :- Resistance between AB

$$\frac{1}{Rp} = \frac{1}{R_1} + \frac{1}{R_2} + \frac{1}{R_3}$$

$$= \frac{R_1R_2 + R_2R_3 + R_1R_3}{R_1 \times R_2 \times R_3}$$

$$\frac{Rp}{1} = \frac{R_1 \times R_2 \times R_3}{R_1R_2 + R_2R_3 + R_1R_3}$$

$$= \frac{2 \times 4 \times 6}{(2 \times 4) + (4 \times 6) + (6 \times 2)}$$

$$= \frac{48}{8 + 24 + 12} = \frac{48}{44} = 1.09\ \Omega$$

$$Rp = 1.09\ \Omega$$

Total Resistance between AC

$R_T = Rp + R4$

$= 1.09 + 1.5$

$= 2.59\ \Omega$

Total current in the circuit $= \frac{V}{R_T}$

$= \frac{10}{2.59} = 3.86$ Amps

Voltage drop across AB $=$ I x Rp

$=$ 3.89 x 1.09

$=$ 4.24 Volt

(Voltage is constant in parallel circuit)

i. Current in 2 Ω Resistor $= \frac{V}{R_1} = \frac{4.24}{2}$

$=$ 2.12 Amps

ii. Current in 4 Ω Resistor $= \frac{V_{AB}}{R_2} = \frac{4.24}{4}$

$=$ 1.06 Amps

iii. Current in 6 Ω Resistor $= \frac{V_{AB}}{R_3} = \frac{4.24}{6}$

$=$ 0.706 Amps

3.9. KIRCHOFF'S LAW

Kirchoff's Law is used to find out the current flow in the network circuits easily where ohm's law is not applicable. It is applicable both for D.C. and A.C. circuits.

They are

1. Current law or Point law

2. Voltage law or Mesh law (or) Tressure law (or) Electro motive for a law.

Current law

The sum of the current flowing towards a junction is equal to the sum of the currents flowing away from it. This is called Kirchoff's Current Law.

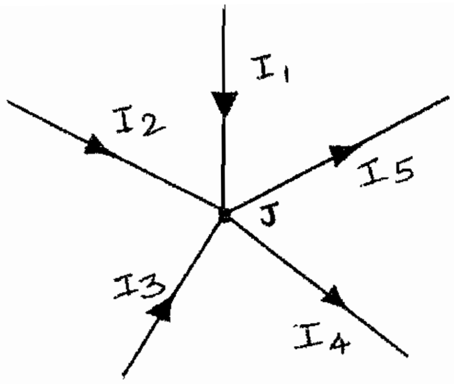

Fig. 3.9 (a)

In the fig. above, J a junction (or node) formed by five conductors. The current in these conductors are I_1, I_2, I_3, I_4, and I_5.

Some of these currents are flowing towards J and others away from it.

According to Kirchoff's Law

$I_1 + I_2 + I_3 \quad = I_4 + I_5$

(Flowing towards J) = (Flowing away from J) =

Otherwise

$I_1 + I_2 + I_3 - I_4 - I_5 = 0$. This is known as KCL equation.

Voltage Law

At any closed circuit the Potential Drop (IR) at each Resistance is equal to the total voltage given to the circuit.

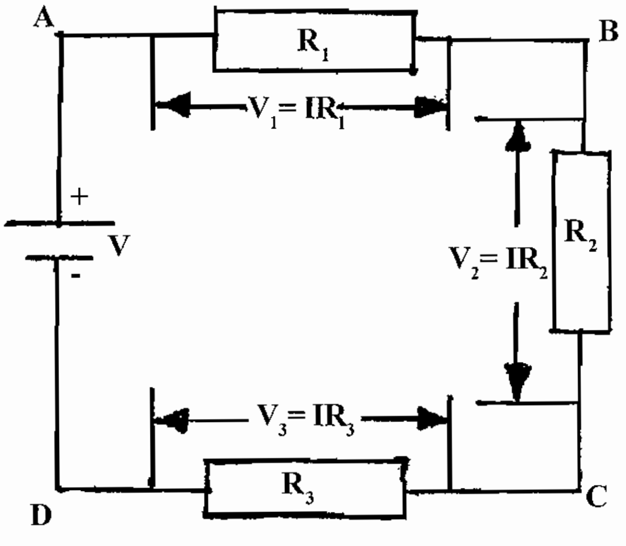

Fig. 3.9 (b)

In a closed circuit, the sum of the potential drop is equal to the sum of the potential rises. This is called Kirchoff's Voltage Law.

$$V = IR_1 + IR_2 + IR_3$$

Example

In the circuit of Fig, find using Kirchoff's laws, the current in the various elements.

Solution

According to Kirchoff's first law mark the direction of current flow. According to Second law, Write down the KVL equation in the closed circuits.

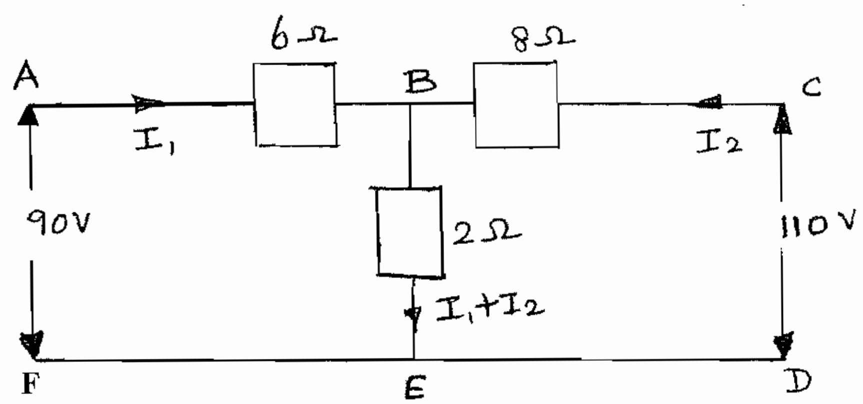

Fig.

1. ABEFA forms a closed circuit

$6I_1 + 2(I_1 + I_2) = 90$

$8I_1 + 2I_2 = 90$

2. CBEDC forms another closed circuit.

$8I_2 + 2(I_1 + I_2) = 110$

$2I_1 + 10I_2 = 110$

$8I_2 + 2I_2 = 90 \quad (1)$

$2I_2 + 10I_2 = 110 \quad (2)$

To solve, equation (2) is multiplied and subtracted from (1) by 4.

$$8I_1 + 2I_2 = 90 \quad (3)$$

$$(2) \times 4 \; - \; 8I_1 \pm 40I_2 = -440 \quad (2)$$

$$-38I_2 = -350$$

$$38I_2 = 350$$

$$I_2 = \frac{350}{38}$$

$$= 9.211 \text{ Amps}$$

Substitute the I_2 value in equation (1)

$8I_1 + 2\,(9.211) = 90$

$8I_1 + 18.422 = 90$

$8I_1 = 90 - 18.422$

$8I_1 = 71.578$

$I_1 = \frac{71.578}{8}$

$= 8.947$ A

$I_1 = 8.947$ Amps

From this,

The current through 6 Ω resistors is = 8.947 A

The current through 8 Ω resistor is = 9.211 A

The current through 2 Ω resistor is = 8.947 + 9.211

= 18.158 A

Example 2

By using Kirchoff's law, calculate the current flowing through each resistor as shown in the

By applying Kirchoff's second law,

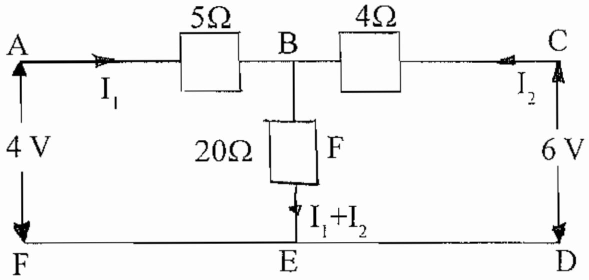

In circuit ABEFA, $5I_1 + 20\,(I_1 + I_2) = 4$

$5I_1 + 20I_1 + 20I_2 = 4$

$25I_1 + 20I_2 = 4$ (1)

In circuit EDCBE, $4I_2 + 20\,(I_1 + I_2) = 6$

$4I_2 + 20I_1 + 20I_2 = 6$

$20I_1 + 24I_2 = 6$

Eqn (1) x 4, $100I_1 + 80I_2 = 16$ (3)

Eqn (2) x 5, $100I_1 + 120I_2 = 30$ (4)

Eqn (3) - (4), $-40I_2 = -14$

$I_2 = 0.35$ A

Substitute $I_2 = 0.35$ in Eqn (1)

$$25\,I_1 + 20\,(0.35) = 4$$

$$25\,I_1 = -7 + 4 = -3$$

$$I_1 = -0.12\ A$$

The path of the current flow in the 5 Ω resistor is -ve, therefore we assume current direction is opposite to that as shown in fig.

Current I_1 in 5 Ω resistor = 0.12 A

Current I_2 in 4 Ω resistor = 0.35 A

Current $I_1 + I_2$ in 20 Ω resistor = 0.23 A

3.10. CAPACITORS

INTRODUCTION

In this we are going to study about an important material used in electrical circuits i.e., capacitors. Capacitor is an instrument to store electrical energy (Capacitance) to a particular time and discharge it when needed. It is also called as condenser.

The charge in the capacitor is denoted by the word capacitance and is measured by the unit called Farad(F).

A capacitor can be manufactured by keeping a di-electric medium in between two electrodes. The di-electric medium can be air, wax coated paper, mica or oil etc.

3.11. CONSTRUCTION

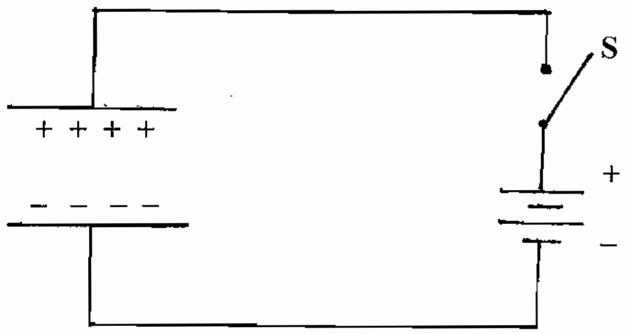

Fig 3.11

A Capacitor can be manufactured by keeping di-electric medium in between two electrodes. The capacitance of the capacitor differs depends upon the distance between the electrodes and the strength of the di-electric medium.

Working of a Capacitor

The fig shows a capacitor is connected across a battery. One electrode is connected to +ve terminal and other is connected –ve terminal of the battery.

Now, the supply is given to the capacitor, the electrode connected in the +ve terminal gets positive charge (+) and the electrode connected in the –ve gets negative charge(-). During this, capacitor gets charging. i.e., The amount of charge between the plates depends upon the dielectric material and also the distance between the electrodes. After few seconds the current flow stops. Now the capacitor voltage is equal to the supply voltage. In this way the power can be stored in a capacitor. This stored power can be used again when needed.

3.12. POWER OF CAPACITOR

Power of the capacitor can be depends upon the construction ie.,

- directly proportional to the area of the electrodes.
- Inversely proportional to the distance between the two electrodes.
- Depends upon the di-electric strength of the insulating media.

3.14 CAPACITANCE

The capacitance of a capacitor is defined as the ratio between the changing given to the capacitor. This is denoted by the letter C and the unit is Farad.

$$\text{Capacitance (C)} = \frac{\text{Charge (Q)}}{\text{Voltage (V)}}$$

$$\text{Therefore } C = \frac{Q}{V} \text{ Farad}$$

Hence C — Capacitance - Farad

Q — Charge given to the capacitor – Coulomb

V — Potential difference between the plates – Volt

If the dielectric medium between the two plates is stronger, then the capacitor can have high charging capacity.

Lower value of capacitance is called as micro farad & Picco farad.

3.14. ONE FARAD

When one volt supply is given to the capacitor, it will get 1 coulomb charge then it is called as 1 Farad.

3.15 TYPES OF CAPACITORS

Capacitors can be classified depending upon their construction and also the material used for making the capacitor. For this, two types are classified as (i) Fixed Capacitor (ii) Variable Capacitor.

3.15.1 Fixed Capacitor

In this, three types of capacitors are mostly used. This type is based on the electrodes and dielectric material used between the two electrodes. These are used in Radio circuit. In this capacitance value cannot be changed. Let us study about these types of capacitors.

Paper Capacitor

Wax paper is rolled in the form of cylinder and dipped in wax solution in order to exhaust the air and placed in between two thin aluminium plates. This type of capacitor is used in de-coupling circuits.

Mica Capacitor

In this instead of paper mica is used as the dielectric medium. Silver mica is coated on the surface of the mica sheet and used as conductive electrodes. This type of capacitors are used in high frequency filters, coupling and tuning circuits.

Ceramic Capacitor

These are the modern capacitors. In this Ceramic is used as dielectric medium. The performance of this capacitor may not be affected even it get heated.

Electrolytic Capacitor

In this, aluminium Borate is used as the dielectric medium. When the paste is used in the form of wet it is termed as Wet Electrolytic capacitor and it is in Dry state it is termed to be Dry Electrolytic capacitor. Ofcourse wet electrolytic capacitor is not in use nowadays.

The dry electrolytic capacitor should be connected carefully. This is small in size but having high capacity.

3.15.2 Variable Capacitor

This type of capacitor is used in tuner circuit of Radio receiver. In this, air is used as dielectric medium between the two aluminium electrodes. The value of the capacitance can be changed within a particular limit.

Capacitance in Series

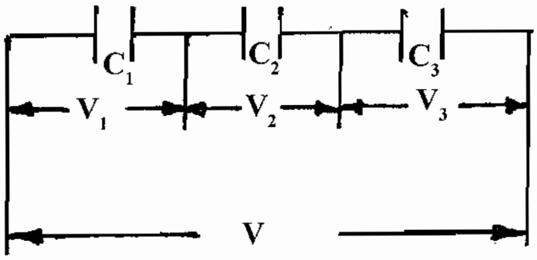

Fig 3.15.2

Three capacitors are connected in series as shown in fig. In this connection if the total capacitance of the circuit is C then,

Capacitor in Series

$$V = \frac{Q}{C}$$

Therefore $V_1 = \frac{Q}{C_1}$

$$V_2 = \frac{Q}{C_2}$$

$$V_3 = \frac{Q}{C_3}$$

$$V_1 + V_2 + V_3 = \frac{Q}{C_1} + \frac{Q}{C_2} + \frac{Q}{C_3}$$

$$V = Q\left(\frac{1}{C_1} + \frac{1}{C_2} + \frac{1}{C_3}\right)$$

$$\frac{V}{Q} = \frac{1}{C_1} + \frac{1}{C_2} + \frac{1}{C_3}$$ Where $\frac{V}{Q} = \frac{1}{C}$

$$\frac{1}{C} = \frac{1}{C_1} + \frac{1}{C_2} + \frac{1}{C_3}$$

$$\frac{1}{C} = \frac{C_2C_3 + C_1C_3 + C_1C_2}{C_1 \times C_2 \times C_3}$$

$$\frac{C}{1} = \frac{C_1C_2C_3}{C_2C_3 + C_1C_3 + C_1C_2}$$

$$C = \frac{C_1C_2C_3}{C_2C_3 + C_1C_3 + C_1C_2}$$

3.15.3. Capacitors in Parallel

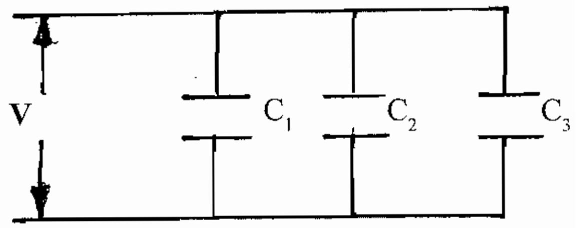

Fig 3.15.3

Three capacitors (C1, C2, C3) are connected in parallel as shown in fig. In this circuit, if the total capacitance of the circuit is C, then

$$Q = VC$$

Therefore $Q_1 = VC_1$

$$Q_2 = VC_2$$

$$Q_3 = VC_3$$

$$Q_1 + Q_2 + Q_3 = VC_1 + VC_2 + VC_3$$

$$Q = V(C_1 + C_2 + C_3)$$

$$\frac{Q}{V} = C_1 + C_2 + C_3 \qquad \text{Where } \frac{Q}{V} = C$$

$$C = C_1 + C_2 + C_3$$

Advantages

- Used in rectifier circuits to filter ac ripples.
- Used as suppressor capacitor in fluorescent lamp.
- Used in Ceiling fan, Radio and Television circuits.

Problem

1. Find out the total capacitance of a circuit when three capacitors 10 mfd, 20 mfd and 30 mfd are connected in series and also in parallel?

Solution:

Capacitors in Series

$$\frac{1}{C} = \frac{1}{C_1} + \frac{1}{C_2} + \frac{1}{C_3}$$

$$\frac{1}{C} = \frac{1}{10} + \frac{1}{20} + \frac{1}{30} = \frac{6 + 3 + 2}{60}$$

$$\frac{1}{C} = \frac{11}{60}$$

$$C = \frac{60}{11} = 5.45 \text{ MFD}$$

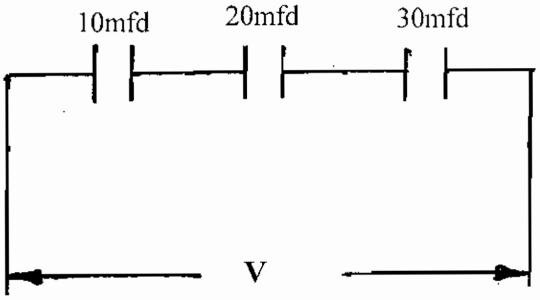

Fig. A

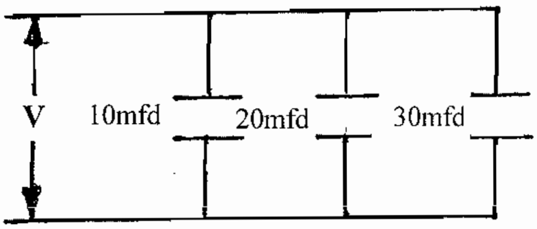

Fig. B

Capacitors in Parallel

$$C = C1 + C2 + C3$$

$$C = 10 + 20 + 30 = 60 \text{ MFD.}$$

3.16. WORK, POWER, EFFICIENCY AND ENERGY

Work

If a force of F moves a body through a distance S in its direction of application is called work. The unit of work is Newton meter. If 1 Newton force displaces a body through a distance of 1 meter then the work done is 1 Nm (Newton-meter)

The potential difference applied across the coil causes to flow through it. This implies that there is an electrical work done. Unit of work done in Joule. In Electric circuit if 1 volt electric potential causes one coulomb of electric charge to pass through a circuit then the electric work done is equal to 1 Joule.

1 Jouel = Volt x Coulomb

Coulomb = Ampere x Time

J = V x I x t

Power

It is the rate of doing work. Its units is Watt (W)

$$\text{Power} = \frac{\text{Work done}}{\text{Time}} \quad \frac{\text{Joules}}{\text{Time}}$$

$$P = \frac{J}{t}$$

$$P = \frac{V \times I \times t}{t}$$

P = VI watts

According to Ohm's law

V = IR

$P = I.R.I. = I^2R$ watt

$P = VI$ (or) $P = I^2R$

$$I = \frac{V}{R}$$

P = VI

$$P = \frac{VV}{R} = \frac{V^2}{R} \text{ watt}$$

P = Power in Watt

V = Voltage in Volt

I = Current in Ampere

R = Resistance in Ohm.

1 kilo watt = 1000 watts.

Mechanical power is measured in horsepower. The relatinship between mechanical power and the electric power is found to be

1 Horsepower = 746 Watts

Watt meters are used to measure the power. Power is denoted by the letter "P".

Efficiency

Efficiency means the ratio between the input power to the output power. In all machineries the output power is lesser than input power.

$$\text{Efficiency} = \frac{\text{Output power}}{\text{Input power}}$$

$$\text{Percentage of efficiency} = \frac{\text{Output x 100}}{\text{Input}}$$

Energy

Energy means the amount of work done by a equipment during a time period of t seconds. Unit of energy is Joules.

Energy = Power x time watt. sec

The energy spent for the appliance is 1 kilo watt hour. It is also called as one unit.

1 unit = 1000 watt hour.

Example : 1

The resistance of a lamp is 10 Ohms, and current through it 2A, calculate the power.

Solution

Resistance (R) = 10

Current (I) = 2A

Power = I^2R

= 2 x 2 x 10

= 40 W

So the power of the lamp is 40 watts

Example 2

Calculate the energy unit when a 500 watts lamp is ON for 6 hours

Solution

1000 watts x 1 Hour = 1 Unit

Energy consumed = 500 x 6 = 3000 Watt-hrs.

$= \frac{3000}{1000} = 3$ Unit

3 Unit of energy is spent by using 500 watts lamp for 6 hours.

Example 3

In a 100 V circuit the current is 4 A

Calculate

(1) Resistance (2) Power (3) Energy for 30 min

Solution

Current (I) = 4 Ampere

Voltage (V) = 100 V

Time (t) = 30 Min.

According to Ohm's Law

$R = \frac{V}{I}$

1) Resistance $= \frac{100}{4} = 25\ \Omega$

2) Power (P) = VI

= 100 x 4 watts

3) Energy (P) = 400 W

t = 30 min. = 0.5 hrs

Energy $= \frac{400 \times 0.5}{1000}$ watt-hrs

= 0.2 Unit

Example 4

In a factory the following appliance are in operation

1. 2 HP Motor 3 hours daily.
2. 100 W lamp 12 hour daily.

3. 1000 w heater, 3 hours daily.

Calculate the cost for energy consumed. (1 Unit cost = Rs. 4.00) in a month consisting of 30 days.

Solution

1. The energy for 2 HP motor 3 hours daily

$$\text{Energy} = \frac{746 \times 2 \times 3}{1000}$$

$$= 4.476 \text{ kWh}$$

2. 100 W lamp 12 hours for daily

$$\text{Energy} = \frac{100 \times 12}{1000}$$

$$= 1.2 \text{ kWh}$$

3. 1000 W Heater 3hours daily

$$\text{Energy} = \frac{1000 \times 3}{1000}$$

for 30 days total unit is

$$= (4.476 + 1.2 + 3) \times 30$$

$$= 8.676 \times 30$$

$$= 260.28 \text{ kwh}$$

Total cost for 30 days

$$= 260.28 \times 4.00$$

$$= \text{Rs. } 1041.12$$

WORKED EXAMPLES

Example 1

Find the current in the 2 Ω resistor path CF.

Solution

Mark the current in various Branches as shown fig. As there are two unknown quantities I_1 and I_2 two equations have to be formed by considering two closed circuits of loops.

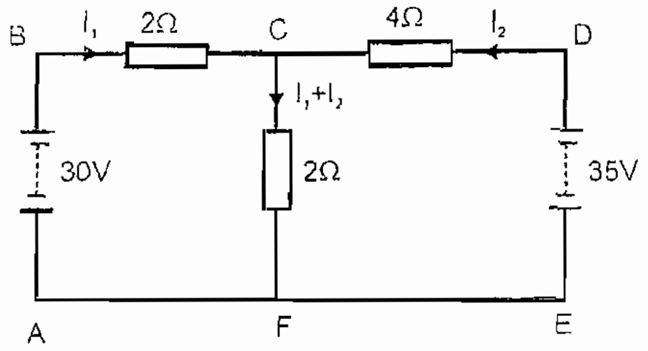

Fig.

Loop ABCFA

$$30 - 2I_1 - 2(I_1 + I_2) = 0$$

$$\text{or } 4I_1 + 2I_2 = 30 \quad \text{——— (1)}$$

Loop ABCDEFA

$$30 - 2I_1 + 4I_2 - 35 = 0$$

$$2I_1 - 4I_2 = 5 \quad \text{——— (2)}$$

Multiply eq (1) by 2 and then add it to eq (2) we get

$$10I_1 = 55$$

$$I_1 = 5.5A$$

Substituting the value of I_1 in eq (1) we get

$$22 + 2I_2 = 30$$

$$I_2 = 4A$$

Current in 2 Ω resistor = 5.5 + 4 = 9.5 A

Example 2

Three resistors of 1 ohm, 2 ohm and 3 ohm are connected in series across a 12V battery. Calculate the voltage drop across each resistor and also determine the power dissipated in each resistor.

Given data :

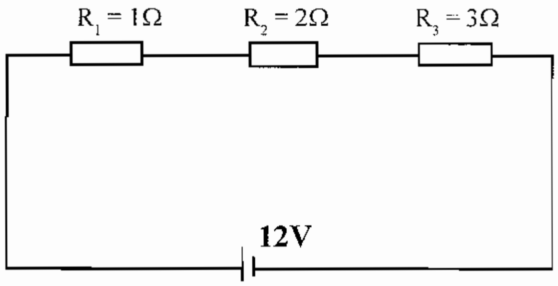

$R_1 = 1\Omega$

$R_2 = 2\Omega$

$R_3 = 3\Omega$

V = 12 volts

To find :

a) Voltage drop across each resistor (V_1, V_2, V_3)

b) Power dissipated in each resistor (P_1, P_2, P_3)

Solution : In series circuit

$R_t = R_1 + R_2 + R_3 = 1 + 2 + 3 = 6$ ohm

$$I = \frac{V}{Rt} = \frac{12}{6} = 2A$$

a) Voltage drop across 1W resistor (V_1) = I R_1 = 2 x 1 = 2 volts

Voltage drop across 2W resistor (V_2) = I R_2 = 2 x 2 = 4 volts

Voltage drop across 3W resistor (V_3) = I R_3 = 2 x 3 = 6 volts

b) Power dissipated in the 1W resistor (P_1) = $I^2R_1 = (2)^2 \times 1 = 4$ watts

Power dissipated in the 2W resistor (P_2) = $I^2R_2 = (2)^2 \times 2 = 8$ watts

Power dissipated in the 3W resistor (P_3) = $I^2R_3 = (2)^2 \times 3 = 12$ watts

Example 3

A lamp has a noted voltage 110V and hot resistance 55 ohms. Find the value of series resistance required to operate the lamp from a 220V supply.

Current through lamp

$$= \frac{110}{55} = 2A$$

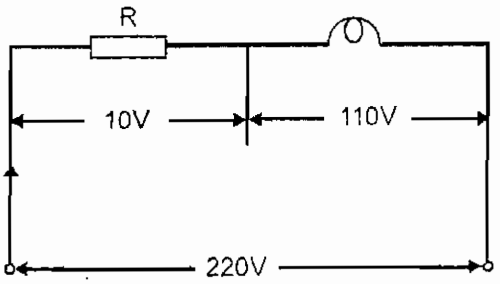

Voltage across R

= 220 – 110 = 110V

Series resistance required to operate at 220V mains.

$$= \frac{110}{2} = 55\ \Omega$$

Example 4

Three resistors 4Ω, 6Ω and 8Ω are connected in parallel across 36 V DC supply find the total resistance and the current through each resistance.

$$\frac{1}{R_t} = \frac{1}{R_1} = \frac{1}{R_2} = \frac{1}{R_3}$$

$$= \frac{1}{4} + \frac{1}{6} + \frac{1}{8}$$

$$\frac{1}{R_t} = \frac{13}{24}$$

$$\therefore R_t = \frac{24}{13} = 1.846\Omega$$

$$I_1 = \frac{V}{R_1} = \frac{36}{4} = 9A$$

$$I_2 = \frac{V}{R_2} = \frac{36}{6} = 6A$$

$$I_3 = \frac{V}{R_3} = \frac{36}{8} = 4.5A$$

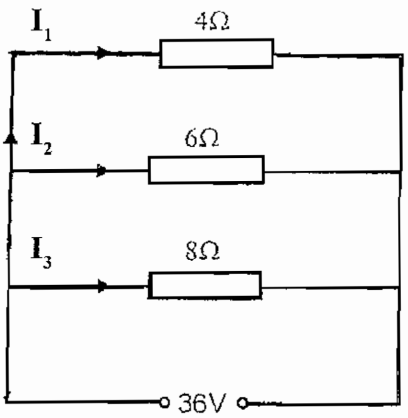

Fig.

Example 5

Three resistor 2, 4 and 12 ohms are connected in parallel across a 12V battery. Find the current through each resistors and the battery. Also find the power dissipated in each resistor.

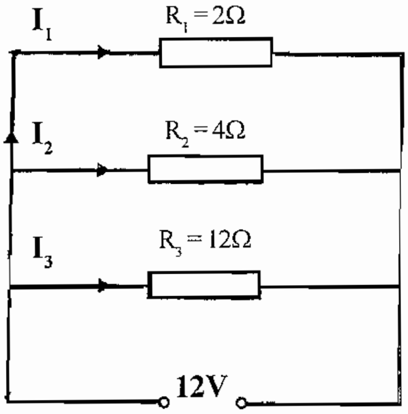

Fig.

Given data : $R_1 = 2\Omega$

$R_2 = 4\Omega$

$R_3 = 12\Omega$

V = 12 volts

To find : a) Current through each resistor (I_1, I_2, I_3)

b) Current supplied by the battery (I)

c) Power dissipated in each resistor (P_1, P_2, P_3)

Solution : In parallel circuit

$$\frac{1}{R_t} = \frac{1}{R_1} + \frac{1}{R_2} + \frac{1}{R_3}$$

$$\frac{1}{R_t} = \frac{1}{2} + \frac{1}{4} + \frac{1}{12} \, i.e., \frac{1}{R_t} = 0.833$$

$$\therefore R_t = \frac{1}{0.833} = 1.2 ohm$$

Current supplied by the battery (I) = $\frac{12}{1.2} = 10 amps$

a) Current through 2 ohm resistor (I_1) = $\frac{V}{R_1} = \frac{12}{2} = 6 amps$

Current through 4 ohm resistor (I_2) = $\frac{V}{R_2} = \frac{12}{4} = 3 amps$

Current through 12 ohm resistor (I_3) = $\frac{V}{R_3} = \frac{12}{12} = 1 amps$

b) Current supplied by the battery = Sum of individual branch currents.

$I = (I_1 + I_2 + I_3) = 6 + 3 + 1 = 10$ amps

c) Power dissipated in 2 ohm resistor (P_1) = $\frac{V^2}{R_1} = \frac{(12)^2}{2} = 72 watts$

Power dissipated in 4 ohm resistor (P_2) = $\frac{V^2}{R_2} = \frac{(12)^2}{4} = 36 watts$

Power dissipated in 12 ohm resistor (P_3) = $\frac{V^2}{R_3} = \frac{(12)^2}{2} = 12 watts$

Example 6

Three resistances of values 8Ω, 12Ω and 24Ω are connected in series. Find the equivalent resistance. Also find the equivalent resistance when they are connected in parallel.

Solution

Case (1)

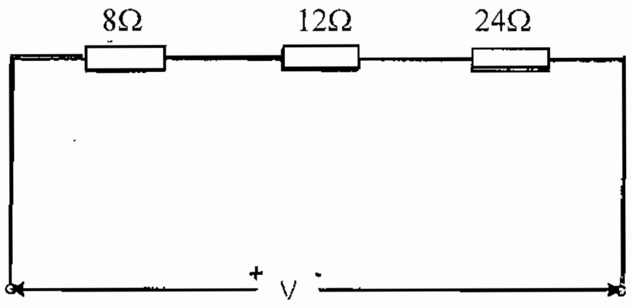

Fig.

Total resistance R_{eq} $= R_1 + R_2 + R_3$

$= 8 + 12 + 24 = 44\Omega$

Case (2)

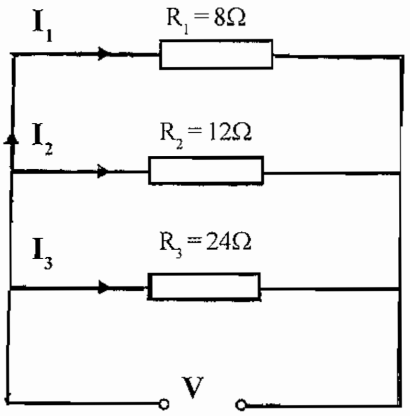

Fig.

$$\frac{1}{R_{eq}} = \frac{1}{R_1} + \frac{1}{R_2} = \frac{1}{R_3}$$

$$= \frac{1}{8} + \frac{1}{12} + \frac{1}{24}$$

$$= \frac{3+2+1}{24} = \frac{6}{24}$$

$R_{eq} = 24/6 = 4\Omega$

Example 7

A circuit consists of two resistor 3 Ω and 6 Ω are in parallel and the combination is connected in series with 8 Ω resistor. Calculate the equivalent resistance and current drawn from 100 volts supply

Solution

Parallel resistance Rp = $\dfrac{R_1 R_2}{R_1 + R_2}$

$$\frac{3X6}{3+6} = 2\Omega$$

$$\text{Req} = R_p + R_3 = 2 + 8 = 10\Omega$$

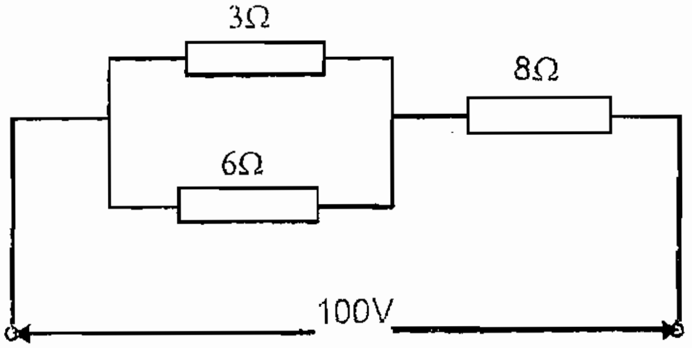

Fig.

Current drawn from the supply = $\dfrac{V}{R_{eq}} = \dfrac{100}{10} = 10A$

Current in 3 Ω resistor = $10x\dfrac{6}{6+3} = 6.67A$

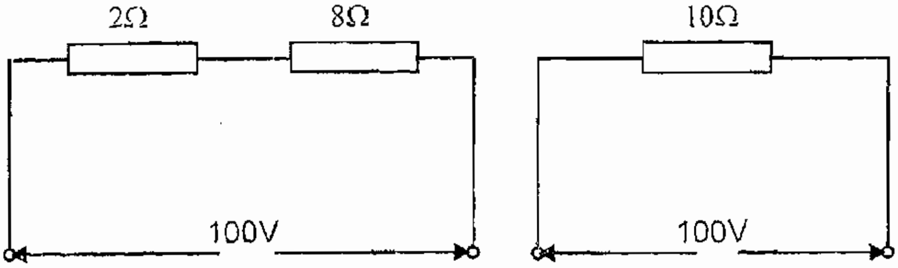

Fig.

Current in 6Ω resistor = $10x\dfrac{3}{6+3} = 3.33A$

Current in 8Ω resistor = 10 A

Example 8

A resistor R is connected in series with a parallel circuit comprises of two resistance of 12 ohm and 8 ohm. The total power dissipated in the circuit is 70 watts when the applied voltage is 20 volts. Calculate the value of R.

Given : Total power (P) = 70 watts

Find : Value of R

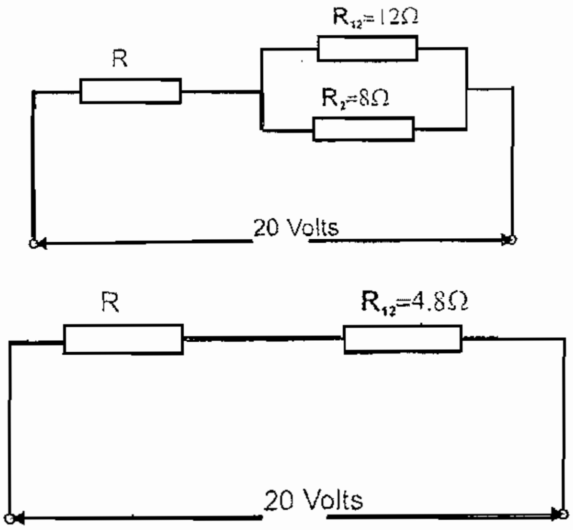

Fig.

Solution $Rt = \frac{V^2}{P} = \frac{(20)^2}{70} = 5.714 ohms$

$$\therefore \frac{1}{R_{12}} = \frac{1}{R_1} + \frac{1}{R_2} = \frac{1}{12} + \frac{1}{8}$$

$$\frac{1}{R_{12}} = 0.0833 + 0.125$$

$$\therefore \frac{1}{R_{12}} = 0.2083$$

$$\therefore R_{12} = \frac{1}{0.2083} = 4.8 ohms$$

$R_t = R + R_{12}$

$R = R_T - R_{12}$

$= 5.714 - 4.8 = 0.914$ ohms

Example 9

A current of 15 amp flows through two ammeters A and B joined in series. The voltage drop across 'A' is 0.15V and across 'B' is 0.3V. Find how some current will divide between A and B. when they are connected in parallel.

Given :

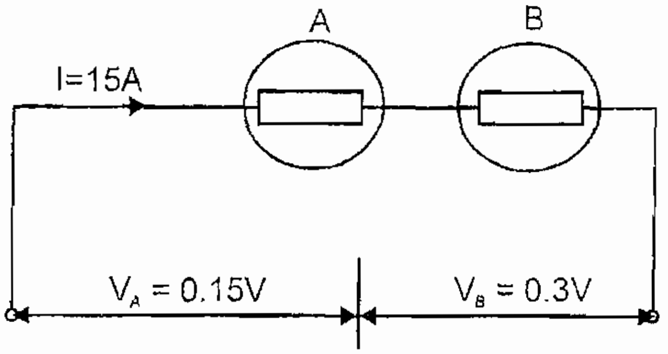

Fig.

Find : When they are connected in parallel, same current will divide between A & B i.e., I_A and I_B.

Solution : $RA = \frac{V_A}{I} = \frac{0.15}{15}$

$= 0.01$ ohms

$$R_B = \frac{V_B}{I} = \frac{0.3}{15} = 0.02\,\Omega$$

$$\therefore \frac{1}{R_{AB}} = \frac{1}{R_A} = \frac{1}{R_B}$$

$$= \frac{1}{0.01} + \frac{1}{0.02} = 100 + 50$$

$$\frac{1}{R_{AB}} = 150$$

$$R_{AB} = \frac{1}{150} = 6.6667 \ x10^{-3}$$

$$I_A = \frac{V}{R_A} = \frac{0.1}{0.01} = 10 \ amps$$

$V = IR_{AB}$

$= 15 \times 6.6667 \times 10^{-3} = 0.1V$

$$I_B = \frac{V}{R_B} = \frac{0.1}{0.02} = 5 \ amps$$

Example 10

A resistor of 10 ohms is connected in series with two resistance each of 15 ohms arranged in parallel. What resistance must be shunted across this combination so that total current taken shall be 1.5 amps 20 V applied?

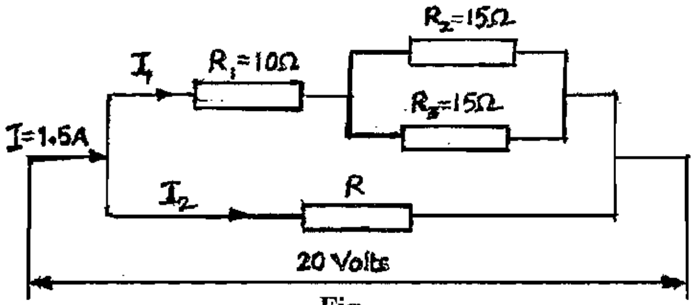

Fig.

Find : The value of R

Solution :

$$\frac{1}{R_{23}} = \frac{1}{R_2} + \frac{1}{R_3}$$

$$= \frac{1}{15} + \frac{1}{15} = 0.667 + 0.0667$$

$$\frac{1}{R_{23}} = 0.1334$$

$$\therefore R_{23} = \frac{1}{0.1334} = 7.5\,ohms$$

$$\therefore R_{23} = R_1 + R_{23}$$

$$= 10 + 7.5 = 17.5\,ohms$$

$$I_1 = \frac{V}{R_{23}} = \frac{20}{17.5} = 1.143\ amps$$

$$I_2 = I - I_1$$

$$= 1.5 - 1.143 = 0.357\ amps$$

$$R = \frac{V}{I_2} = \frac{20}{0.357} = 56\ ohms$$

Example 11

A 110V 60W lamp is connected in series with another lamp rated 110V, 100W across 220V mains. Calculate the value of resistance to be shunted across the first lamp so that both lamp take their rated power.

Given : Lamp 1 (L_1): P_1 = 60 W; V_1 = 110V

Lamp 2 (L_2): P_2 = 100 W; V_2 = 110V

V = 220 volts

Find : The value of shunting resistance across the first lamp (R_{sh})

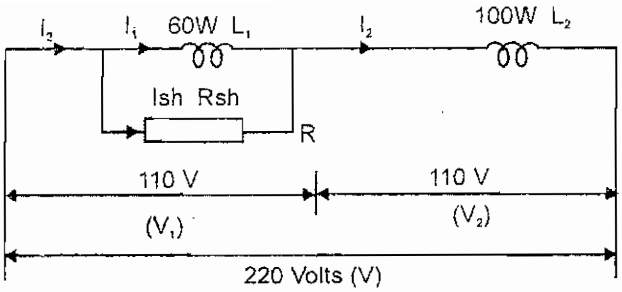

Fig.

Solution :

$$I_2 = \frac{P_2}{V_2} = \frac{100}{110} = 0.909\ amps$$

$$I_1 = \frac{P_1}{V_1} = \frac{60}{110} = 0.545\ amps$$

$I_{sh} = I_2 - I_1$

$= 0.909 - 0.5454 = 0.3636$ amps

$$R_{sh} = \frac{V_1}{I_{sh}} = \frac{110}{0.3636} = 302.5\ \text{ohms}$$

Example 12

Two resistors of 1000 ohm and 4000 ohm are connected in series across a constant voltage supply of 250v. Find the p.d. across each. If a voltmeter of 12000 ohm resistance is connected across the larger resistors, what is the reading on the meter.

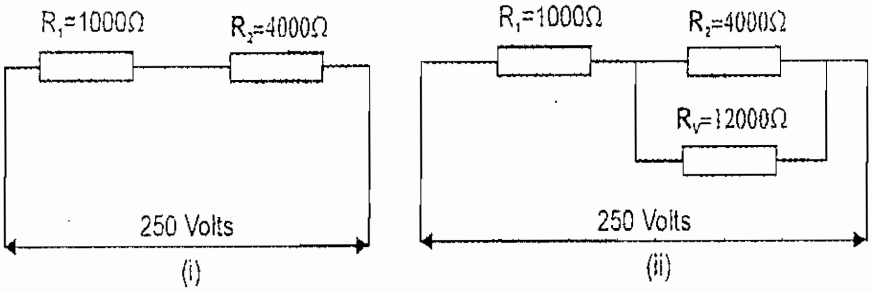

Fig.

Given :

Find : i) a) V_1 b) V_2

ii) Voltmeter reading (V_2)

Solution : i) $R_T = R_1 + R_2$

$= 1000 + 4000 = 5000$ ohms

$$I = \frac{V}{R_T} = \frac{250}{5000} = 0.05 amps$$

$V_1 = I \times R_1 = 0.05 \times 1000 = 50$ volts

$V_2 = I \times R_2 = 0.05 \times 4000 = 200$ volts

ii) $$\frac{1}{R_{2V}} = \frac{1}{R_2} + \frac{1}{R_V}$$

$$= \frac{1}{4000} + \frac{1}{12000}$$

$$\frac{1}{R_{2V}} = 2.5X10^{-4} + 8.333X10^{-5}$$

$$\frac{1}{R_{2V}} = 3.3333X10^{-4}$$

$$R_{2V} = \frac{1}{3.3333X10^{-4}} = 3000 ohms$$

$R_T = R_1 + R_{2V}$

$= 1000 + 3000$

$= 4000$ ohms

$$I_{New} = \frac{V}{R_T} = \frac{250}{4000} = 0.0625 amps$$

$V2 = I_{New} \times R_{2V}$

$= 0.0625 \times 3000 = 187.5$ volts

Example 13

Determine the currents in different branches of the circuit shown in Fig.

Find : Currents in the different branches of the circuit (I_1, I_2, $I_1 + I_2$)

Solution : Closed loop ABEFA

$3I_1 + 20(I_1 + I_2) - 100 = 0$

$3I_1 + 20I_1 + 20I_2 = 100$

$23I_1 + 20I_2 = 100$

Closed loop CBEDC

$$4I_2 + 20(I_1 + I_2) - 110 = 0$$

$$4I_2 + 20I_1 + 20I_2 = 110$$

$$20I_2 + 24I_2 = 110$$

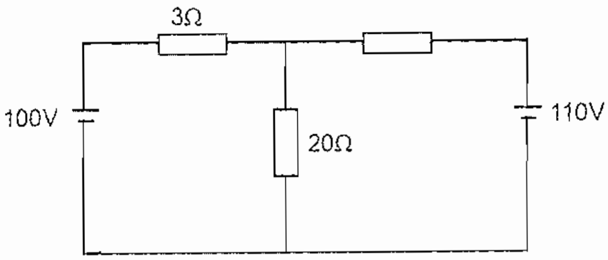

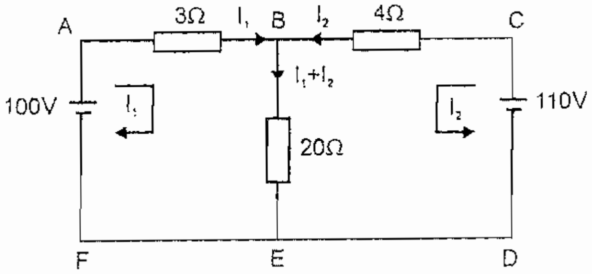

Fig.

$$\begin{bmatrix} 23 & 20 \\ 20 & 24 \end{bmatrix} \begin{bmatrix} I_1 \\ I_2 \end{bmatrix} = \begin{bmatrix} 100 \\ 110 \end{bmatrix}$$

$$\Delta = \begin{vmatrix} 23 & 20 \\ 20 & 24 \end{vmatrix} = (23X24) - (20X20) = 152$$

$$\Delta_1 = \begin{vmatrix} 100 & 20 \\ 110 & 24 \end{vmatrix} = (100X24) - (20X110) = 200$$

$$\Delta_2 = \begin{vmatrix} 23 & 100 \\ 20 & 110 \end{vmatrix} = (23X100) - (100X20) = 530$$

$$I_1 = \frac{\Delta_1}{\Delta} = \frac{200}{152} = 1.315A$$

$$I_2 = \frac{\Delta_2}{\Delta} = \frac{530}{132} = 3.486\,A$$

Current through 20 Ω resistor = $I_1 + I_2 = 1.315 + 3.486 = 4.801$ A

Current through 3W resistor (AB) (I_1) = 1.314 A

Current through 4W resistor (CB) (I_2) = 3.486 A

Current through 20W resistor (BE) ($I_1 + I_2$) = 4.801 A

Example 14

Using Kirchoff's laws, determine the currents in the unbalanced bridge circuit shown in Fig.

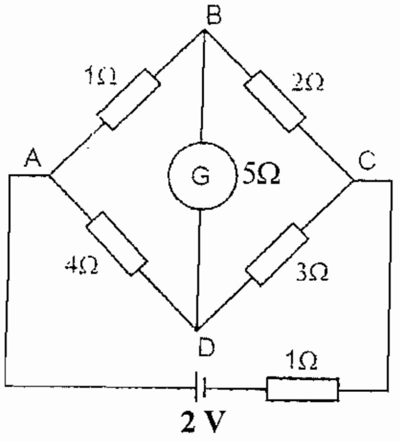

Fig.

Find : Currents in the unbalanced bridge circuit.

Solution : Closed loop ABDA

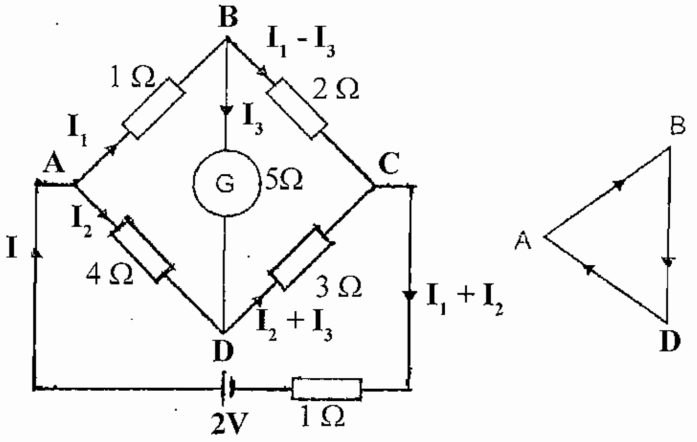

Fig.

Assume direction

$I_1 + 5I_3 - 4I_2 = 0$

$I_1 - 4I_2 + 5I_3 = 0$

Closed loop BCDB Fig.

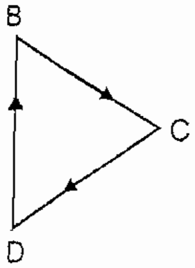

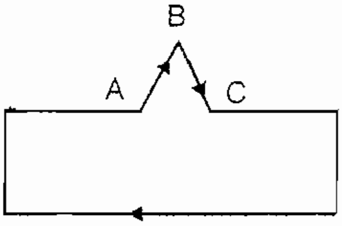

$2(I_1 - I_3) - 3(I_2 + I_3) - 5I_3 = 0$

$2I_1 - 2I_3 - 3I_2 - 3I_3 - 5I_3 = 0$

$2I_1 - 3I_2 - 10I_3 = 0$

Closed loop ABCA Fig.

$I_1 + 2(I_1 - I_3) + (I_1 + I_2) - 2 = 0$

$I_1 + 2I_1 - 2I_3 + I_1 + I_2 = 2$

$4I_1 + I_2 - 2I_3 = 2$

$$\begin{bmatrix} 1 & -4 & 5 \\ 2 & -3 & -10 \\ 4 & 1 & -2 \end{bmatrix} \begin{bmatrix} I_1 \\ I_2 \\ I_3 \end{bmatrix} = \begin{bmatrix} 0 \\ 0 \\ 2 \end{bmatrix}$$

$$\Delta = \begin{vmatrix} 1 & -4 & 5 \\ 2 & -3 & -10 \\ 4 & 1 & -2 \end{vmatrix} = 1(6+10)+4(-4+40)+5(2+12)$$

$$= 16 + 144 + 70 = 230$$

$$\Delta_1 = \begin{vmatrix} 0 & -4 & 5 \\ 0 & -3 & -10 \\ 2 & 1 & -2 \end{vmatrix} = 0(6+10) + 4(0+20) + 5(0+6)$$

$$= 80 + 30 = 110$$

$$\Delta_2 = \begin{vmatrix} 1 & 0 & 5 \\ 2 & 0 & -10 \\ 4 & 2 & -2 \end{vmatrix} = 1(0+20)+0(-4+40)+5(4+0) = 20+20 = 40$$

$$\Delta_3 = \begin{vmatrix} 1 & -4 & 0 \\ 2 & -3 & 0 \\ 4 & 1 & -2 \end{vmatrix} = 1(-6+0)+4(4+0)+0(2+12) = -6+16 = 10$$

$$I_1 = \frac{\Delta_1}{\Delta} = \frac{110}{230} = 0.4782\ A$$

$$I_2 = \frac{\Delta_2}{\Delta} = \frac{40}{230} = 0.174\ A$$

$$I_3 = \frac{\Delta_3}{\Delta} = \frac{10}{230} = 0.43\ A$$

Current through 1Ω resistor (AB) I_1	=	0.4782 A
Current through 2 Ω resistor (BC) $(I_1 - I_3)$	=	0.4782 – 0.043
	=	0.4352 A
Current through 3Ω resistor (CD) $(I_2 + I_3)$	=	0.174 + 0.043
	=	0.217A
Current through 4 Ωresistor (DA) (I_2)	=	0.174A
Current through the battery $(I_1 + I_2)$	=	0.4782 + 0.174
	=	0.6522A

Example 15

1. Determine the currents in different branches of the circuit as shown in fig.

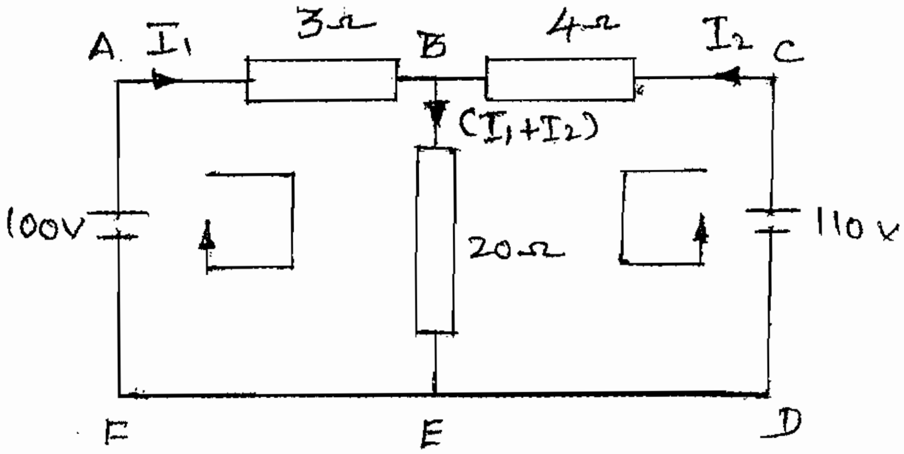

Fig.

To find : Find the currents in the different branches of the circuit $(I_1, I_2, I_1 + I_2)$

Solution

Closed loop ABEFA

$$3I_1 + 20 (I_1 + I_2) - 100 = 0$$

$$3I_1 + 20I_1 + 20I_2 = 100$$

$$3I_1 + 20I_2 = 100$$

Closed loop CBEDC

$$4I_2 + 20\,(I_1 + I_2) - 110 = 0$$

$$4I_2 + 20I_1 + 20I_2 \qquad = 110$$

$$20I_1 + 24I_2 \qquad = 110$$

$$\begin{vmatrix} 23 & 20 \\ 20 & 24 \end{vmatrix} \begin{vmatrix} I_1 \\ I_2 \end{vmatrix} = \begin{vmatrix} 100 \\ 110 \end{vmatrix}$$

$$\Delta = \begin{vmatrix} 23 & 20 \\ 20 & 24 \end{vmatrix} = (23 X\, 24) - (20\ X\ 20)$$

$$= 552 - 400 = 152$$

$$\Delta = 152$$

$$\Delta_1 \begin{vmatrix} 100 & 20 \\ 110 & 24 \end{vmatrix} = (100\ X\ 24) - (110\ X\ 20)$$

$$= 2400 - 2200 = 200$$

$$\Delta_1 = 200$$

$$\Delta 2 = \begin{vmatrix} 23 & 100 \\ 20 & 110 \end{vmatrix} = (23 X\ 110) - (20\ X\ 100)$$

$$= 2530 - 200 = 530$$

$$\Delta_2 \qquad = 530$$

$$I_1 = \frac{\Delta_1}{\Delta} = \frac{200}{152} = 1.315 Amps$$

$$I_2 = \frac{\Delta_2}{\Delta} = \frac{530}{152} = 3.486\ Amps$$

$$I_1 + I_2 = 1.315 + 3.486 = 4.801 Amps$$

Current through 3Ω Resistor (I_1) = 1.315 Amps

Current through 4Ω Resistor (I_2) = 3.486 Amps

Current through 20Ω Resistor ($I_1 + I_2$) = 4.801 Amps

Example 16

Using Kirchoffs law determine the currents in the unbalanced bridge circuit shown in Fig.

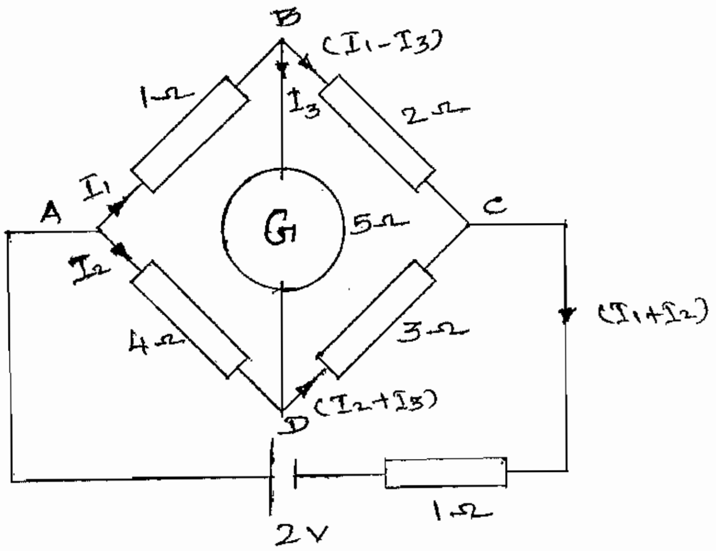

Fig.

To Find : Determine the current in the unbalanced bridge circuit.

Solution

Closed loop ABDA

$I_1 + 5I_3 - 4I_2 = 0$

$I_1 - 4I_2 + 5I_3 = 0$ ——————————— 1

Closed loop BCDB

$2(I_1 - I_3) - 3(I_2 + I_3) - 5I_3 = 0$

$2I_1 - 2I_3 - 3I_2 - 3I_3 - 5I_3 = 0$

$2I_1 - 3I_2 - 10I_3 = 0$ ——————————— 2

Closed loop ABCA

$I_1 + 2(I_1 - I_3) + (I_1 + I_2) - 2 = 0$

$I_1 + 2I_1 - 2I_3 + I_1 + I_2 = 2$

$4I_1 + I_2 - 2I_3 = 2$ ——————————— 3

$$\begin{vmatrix} 1 & -4 & 5 \\ 2 & -3 & -10 \\ 4 & 1 & -2 \end{vmatrix} \begin{vmatrix} I_1 \\ I_2 \\ I_3 \end{vmatrix} = \begin{vmatrix} 0 \\ 0 \\ 2 \end{vmatrix}$$

$$\Delta = \begin{vmatrix} 1 & -4 & 5 \\ 2 & -3 & -10 \\ 4 & 1 & -2 \end{vmatrix} = 1 \begin{vmatrix} -3 & -10 \\ 1 & -2 \end{vmatrix} + 4 \begin{vmatrix} 2 & -10 \\ 4 & -2 \end{vmatrix} + 5 \begin{vmatrix} 2 & -3 \\ 4 & 1 \end{vmatrix}$$

$$= 1\ (6 + 10) + 4\ (-4 + 40) + 5\ (2 + 12)$$

$$= 16 + 144 + 70$$

$$= 230$$

$$\Delta_1 = \begin{vmatrix} 0 & -4 & 5 \\ 0 & -3 & -10 \\ 2 & 1 & -2 \end{vmatrix} = 0 \begin{vmatrix} -3 & -10 \\ 1 & -2 \end{vmatrix} + 4 \begin{vmatrix} 0 & -10 \\ 2 & -2 \end{vmatrix} + 5 \begin{vmatrix} 0 & -3 \\ 2 & 1 \end{vmatrix}$$

$$= 0\ (6 + 10) + 4\ (0 + 20) + 5\ (0 + 6)$$

$$= 0 + 80 + 30$$

$$= 110$$

$$\Delta_2 = \begin{vmatrix} 1 & 0 & 5 \\ 2 & 0 & -10 \\ 4 & 2 & -2 \end{vmatrix} = 1 \begin{vmatrix} 0 & -10 \\ 2 & -2 \end{vmatrix} - 0 \begin{vmatrix} 2 & -10 \\ 4 & -2 \end{vmatrix} + 5 \begin{vmatrix} 2 & 0 \\ 2 & 2 \end{vmatrix}$$

$$= 1\ (0 + 20) - 0\ (-4 + 40) + 5\ (4 + 0)$$

$$= 20 + 0 + 20 = 40$$

$$\Delta_3 = \begin{vmatrix} 1 & -4 & 0 \\ 2 & -3 & 0 \\ 4 & 1 & 2 \end{vmatrix} = 1 \begin{vmatrix} -3 & 0 \\ 1 & 2 \end{vmatrix} + 4 \begin{vmatrix} 2 & 0 \\ 4 & 2 \end{vmatrix} + 0 \begin{vmatrix} 2 & -3 \\ 4 & 1 \end{vmatrix}$$

$$= 1\ (-6 + 0) + 4\ (4 + 0) + 0\ (2 + 12)$$

$$= -6 + 16 + 0 = 10$$

$$I_1 = \frac{\Delta_1}{\Delta} = \frac{110}{230} = 0.478 Amps$$

$$I_2 = \frac{\Delta_2}{\Delta} = \frac{40}{230} = 0.174\ Amps$$

$$I_3 = \frac{\Delta_3}{\Delta} = \frac{10}{230} = 0.043 Amps$$

Current through 1 Ω Resistor (AB) $I_1 = 0.478$ Amps

Current through 2 Ω Resistor (BC) $(I_1 - I_3) = 0.478 - 0.043 = 0.435$ Amps

Current through 3 Ω Resistor (CD) $(I_2 + I_3) = 0.174 + 0.043 = 0.217$ Amps

Current through 4 Ω Resistor (DA) $(I_2) = 0.174$ Amps

Current through the battery $(I_1 + I_2)$ $= 0.478 + 0.174$

$= 0.652$ Amps

Questions

Part - A

I. Choose the Correct Answer

1) The Unit of Resistance is

a) Joule b) Ohm c) Ampere d) Watts

2) The value of Resistance measured by,

a) Voltmeter b) Wattmeter c) Ohmmeter d) None of these.

3) The EME induced in a conductors measured in,

a) Ohm b) Watts c) Volt d) ampere.

4) One Kilo ohm is equal to

a) $10^3\Omega$ b) $10^6\Omega$ c) $10^2\Omega$ d) 10Ω

5) The unit of power is,

a) Farad b) Volt c) watts d) Hertz

6) In series circuit has,

a) two path b) Three path c) One path d) none of these.

7) According to ohm's law R is equal to,

a) V^2/R b) I^2R c) V/I d) VI

Part - B

II. Answer the following questions in one word

1) What is the unit of current?
2) What is the unit of EMF?
3) What is the unit of Resistance?
4) What is the unit of Capacitor?
5) Which letter used for specific Resistance?
6) If you add more resistance in series will the current increase?
7) All the appliance connected in your home are in series (or) in parallel?
8) How many laws are these in Krichoff's law?

Part - C

III. Answer the following questions in briefly

1) What is Voltage?

2) What is Resistance?

3) State the ohm's law.

4) What is open circuit?

5) How you can calculate the power consumed in circuit?

6) The supply voltage of the circuit 240 volts and the resistance value is 60Ω calculate the current flowing throug the circuit?

7) Power of heating element 1000 watts, the voltage applied is 240 volt, calculate the current?

8) 2Ω, 6Ω, 8Ω resistors are connected in series calculate the total resistance?

Part - D

IV. Answer the following questions in one page level

1) Explain the Krichoff's Law with neat diagram?

2) Write the condition of series circuit?

3) Write the condition of parellel Circuit?

4) 3Ω/ 6Ω/ 12Ω Resistors are connected in parallel supply voltage in 240 volt, calculate the total resistance and current?

Part - E

V. Answer the following questions in two page level

1. Calculate the current in each resistant using Krichoff's law.

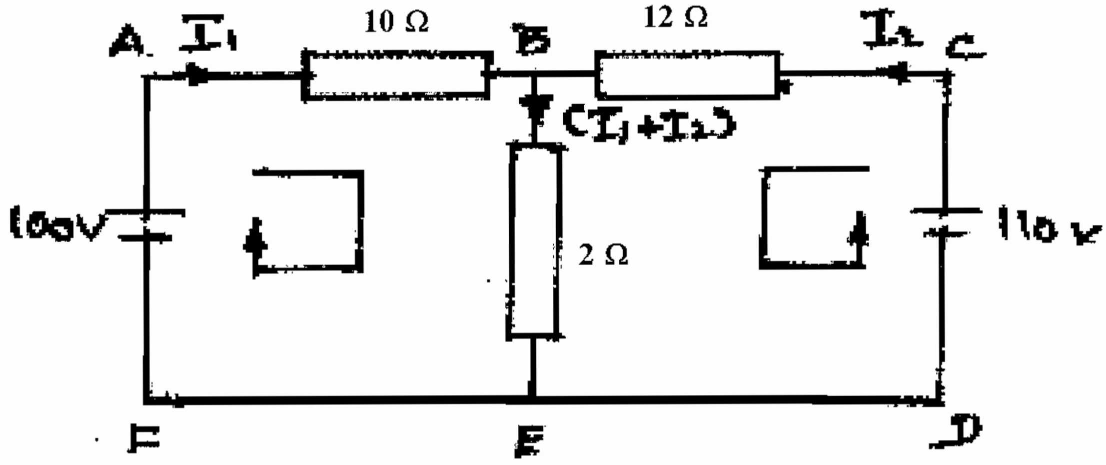

2. Calculate the current flow through each resistance of above wheat stone bridge circuit.

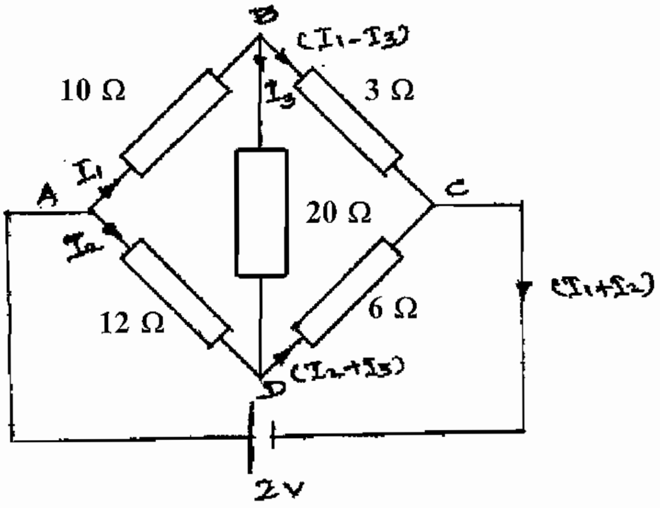

3) The following electrical appliances are working in a factory,

a) 100 Walts, power of 40 lamps each working 8 hours in a day,

b) 1500 watts heater working 6 hours per day

c) 85% efficiency of 3 HP motor working 5 hours per day.

The charge of one units 4.00 calculate the electric bill for 30 days?

4. ELECTRO MAGNETISM

4.1. INTRODUCION

Magnetism plays an important role in electricity. Electrical appliances like Generator, Motor, Measuring instruments and Transformer are based on the electromagnetic principle and also the important components of Television, Radio and Aeroplane are working on the same principle.

4.1.1. Magnetic Material

Magnetic materials are classified based on the property called permeability as

1. Dia Magnetic Materials
2. Para Magnetic Materials
3. Ferro Magnetic Materials

1. Dia Magnetic Materials

The materials whose permeability is below unity are called Dia magnetic materials. They are repled by magnet.

Ex. Lead, gold, copper, glass, mercury

2. Para Magnetic Materials

The materials with permeability above unity are called para magnetic materials. The force of attraction by a magnet towards these materials is low.

Ex.: Copper Sulphate, Oxygen, Platinum, Aluminium.

3. Ferro Magnetic Materials

The materials with permeability thousands of times more than that of paramagnetic materials are called ferro magnetic materials. They are very much attracted by the magnet.

Ex. Iron, Cobalt, Nickel.

4.2. PERMANENT MAGNET

Permanent magnet means, the magnetic materials which will retain the magnetic property at all times permanently. This type of magnets are manufactured by aluminium, nickel, iron, cobalt steel (ALNICO).

To make a permanent magnet a coil is wound over a magnetic material and DC supply is passed through the coil.

4.2.1. Electro Magnet

Insulated wire wound on a bobbin in many turns and layers in which current is flowing and a soft iron piece placed in the bobbin is called electromagnet.

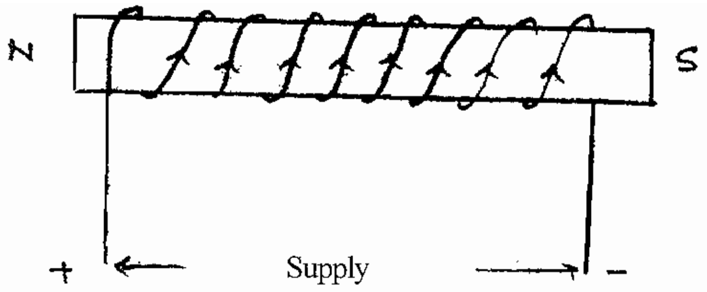

Fig. 4.2.1.

This is used in all electrical machines, transformers, electric bells. It is also used in a machine used by doctors to pull out iron filing from eyes, etc.

4.3. MAGNETIC EFFECT BY ELECTRIC CURRENT

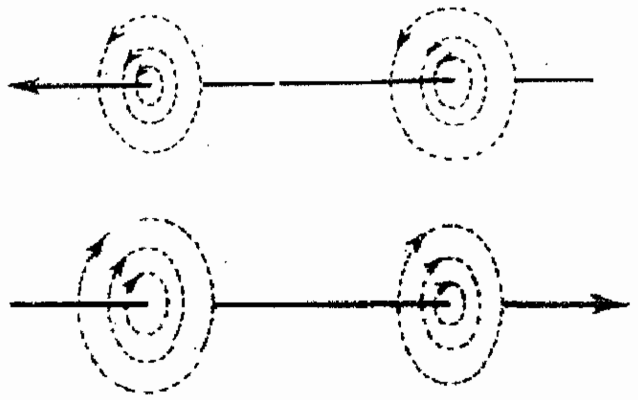

Fig. 4.3.

If current passes through a conductor magnetic field is set up around the conductor. The quantity of the magnetic field is proportion to the current.

The direction of the magnetic field is found by right hand rule or max well's corkscrew rule.

4.4. RIGHT HAND RULE

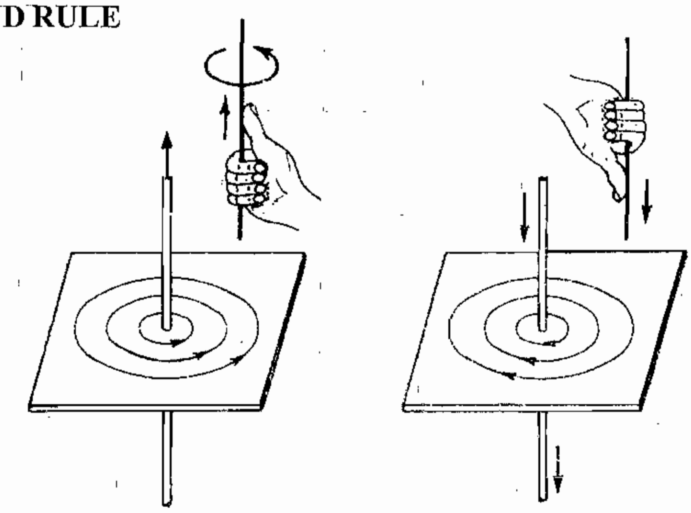

Fig. 4.4

This rule is used to know the direction of magnetic field when the current passes through the conductor.

According to this rule

Flemings right hand rule states that, if we spread out thumb fore finger and middle finger mutually at right angles to each others and the thumb points to the directions of motion of the conductor and the forfinger points the direction of magnetio flux, then the middle finger gives the direction of induced EMF.

4.5. MAXWELLS CORK SCREW RULE

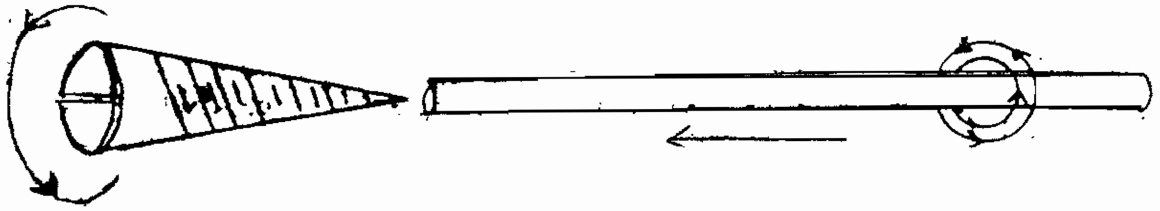

Fig. 4.5.

This rule also used to know the direction of magnetic field when a current passes through a conductor. According to this rule a right handed screw is held with the axis of the conductor to advance in the direction of current when screwed. Then the rotating direction of the head of the screw indicates the direction of magnetic field.

4.6. PERMEABILITY

The permeability of a magnetic material is defined as the ratio of flux created in that maerial to the flux created in air, provided that mmf and dimensions of the magnetic circuit remain the same. It's symbol is μ and

$\mu = B/H$

where B is the flux density

H is the magnetising force

Being a ratio it has no unit and it is expressed as a mere number. The permeability of air μ air = unity. The relative permeability μr of iron and steel ranges from 50 to 2000. The permeability of a given material varies with its flux density.

4.6.1. Magnetic Field

The space around a magnet in which the influence of the magnet can be detected is called the magnetic field.

4.6.2. Magnetic Lines

Magnetic lines of force (flux) are assumed to be continous loops, the flux lines continuing on through the magnet. They do not stop at the poles.

4.6.3. Magnetic Flux

The magnetic flux in a magnetic circuit is equal to the total number of lines existing on the cross-section of the magnetic core at right angle to the direction of the flux. Its symbol is ϕ and the SI unit is weber.

$$\phi = \frac{NI}{S}$$

$$= \frac{NIa\mu_o\mu_r}{\ell}$$

where

ϕ	- total flux
N	- number of turns
I	- current in amperes
S	- reluctance
μ_o	- permeability of free space
μ_r	- relative permeability
a	- magnetic path cross-sectional area in m^2
ℓ	- lengh of magnetic path in metres

4.6.4. Magnetic field strengh

This is also known sometimes as field intensity, magnetic intensity or magnetic field, and is represented by the letter H. Its unit is ampere turns per metre.

$$H = \frac{MMF}{\text{Length of coil in metres}} = \frac{NI}{\ell}$$

4.6.5. Flux density

The total number of lines of force per square metre of the cross-sectional area of the magnetic core is called flux density, and is represented by the symbol B. Its SI unit (in the MKS system) is tesla (weber per metre square).

$$B = \frac{\phi}{A} \text{ Weber / } m^2$$

where ϕ total flux in webers

A - area of the core in square metres

B - flux density in weber/metre square.

4.6.6. Magneto – Motive Force

The amount of flux density set up in the core is dependent upon five factors - the current, number of turns, material of the magnetic core, length of core and the cross-sectional area of the core. More current and the more turns of wire we use, the greater will be the magnetising effect. We call this product of the turns and current the magneto motive force (mmf), similar to the electro motive force (emf).

MMF = NI ampere - turns

where mmf - is the magnetomotive force in ampere turns

N - is the number of turns wrapped on the core

I - is the current in the coil, in amperes, A.

4.6.7. Magnetic Reluctance

In the magnetic circuit there is something analogous to electrical resistance, and is called reluctance, (symbol S). The total flux is inversely proportional to the reluctance and so if we denote mmf by ampere turns. we can write

$\phi = \frac{NI}{S}$ where ϕ is flux, and relutance $S = \frac{\ell}{\mu_o \mu_r a}$

where S - reluctance

I - length of the magnetic path in metres

μ_o - permeability of free space

μ_r - relative permeability

a - cross-sectional area of the magnetic path in sq.mm.

Its unit of reluctance is ampere turns/Wb.

4.7. Comparison between magnetic and Electic circuit

S.No.	Electric Circuit	Magnetic Circuit
1.	Electro motive force in volt (unit)	Magnetic motive force in ampere turns (unit)
2.	Current in ampere (I)	Flux in webers (ϕ)
3.	Resistance $R = \rho l / a$	Reluctance in At/wb $S = 1/au$
4.	Conductivity = $\frac{1}{\text{Resistivity}}$	Permability = $\frac{1}{\text{Reluctivity}}$
5.	Conductance = $\frac{1}{\text{Resistance}}$	Pemeance = $\frac{1}{\text{Reluctance}}$

6.	Current I = $\frac{EMF}{Resistance}$	Flux = $\frac{MMF}{Reluctance}$
7.	Resistivity	Reluctivity
8.	Current density	Flux density

4.8.1. Residual Magnetism

It is the magnetism which remains in a material when the effective magnetizing force has been reduced to zero.

4.8.2. Magnetic Saturation

The limit beyond which the strength of a magnet cannot be increased is called magnetic saturation.

4.9. SOLENOID

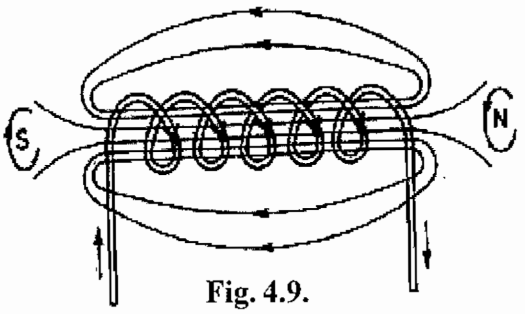

Fig. 4.9.

A helically wound coil that is made to produce a strong magnetic field is called a solenoid. The flux lines in a solenoid act in the same way as in a magnet. They leave the North pole to go around to the south pole when a solenoid attracts an iron bar. It will draw the bar inside the coil.

4.9.1. END RULE

According to this rule the current direction when looked from one end of the coil is in clock wise direction then that end is south pole. If the current direction is in anti clock wise direction then that end is north pole.

4.9.2. Force between two parallel conductor

Current in the same direction

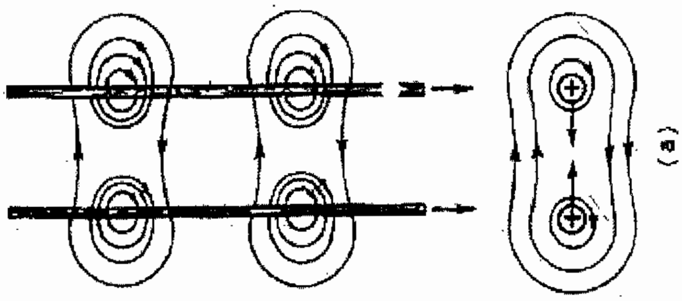

Fig. 4.9.2.

If two conductors are placed parallel to each other and they carry current in the same direction, then the magnetic field setup by the conductors oppose each other. So the field strength between the conductor decreases. Hence the conductors attract each other when the current is the same direction through both the conductors.

Current Opposite direction

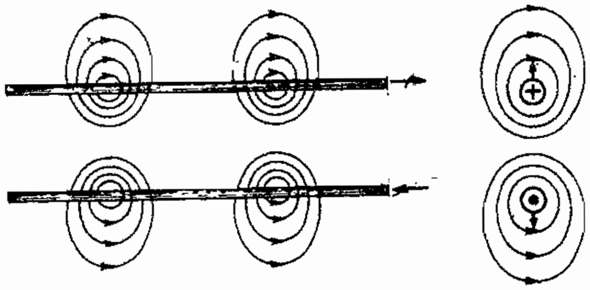

Fig. 4.9.2.a.

If two conductors are placed parallel to each other and the current in the conductors are in opposite directions then the magnetic field setup by the conductors repel each other. So, the field strength between the conductor is increased. Hence the conductors repel each other when the current is in oppositve directions.

4.10. ELECTRO MAGNETIC INDUCTION

Electro magnetic induction means the electricity induced by the magnetic field

4.10.1. Faraday's Laws of Electro Magnetic Induction

There are two laws of Faraday's laws of electro magnetic induction. They are,

1) First Law 2) Second Law

First Law

Whenever a conductor cuts the magnetic flux lines an emf is induced in the conductor.

Second Law

The magnitude of the induced emf is equal to the rate of change of flux-linkages.

4.10.2. Induced Electro Motive force

Induced electro motive forces are of two types. They are,

i) Dynamically induced emf.

ii) Statically induced emf.

Dynamically induced EMF

Dynamically induced emf means an emf induced in a conductor when the conductor moves across a magnetic field. The figure shows when a conductor 'A' with the length 'L' moves across a 'B' wb/m^2.

Flux density with 'V' velocity, then the dynamically induced emf is induced in the conductor. This induced emf is utilised in the generator.

The quantity of the emf can be calculated using the equation

emf = Blv Volt

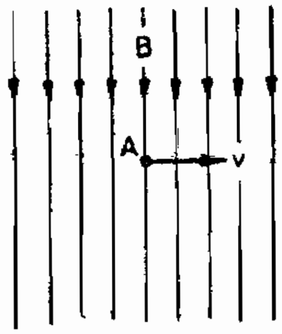

Fig. 4.10.2.

4.10.3. FLEMING'S RIGHT HAND RULE

This rule is used to find out the direction of dynamically induced emf.

According to the rule hold out the right hand with the Index finger middle finger and thumb at the right angels to each others.

If the index finger represents the direction of the lines of flux, the thumb points in the direction of motion then middle finger points in the direction of induced current.

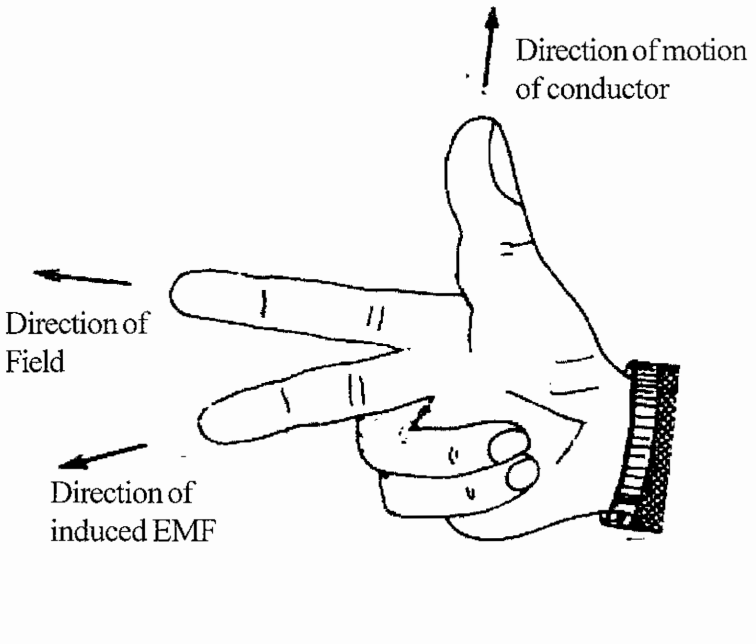

Fig. 4.10.3.

4.11. STATICALLY INDUCED EMF

Statically Induced emf is of two types. They are

1. Self induced emf.
2. Mutually induced emf.

4.11.1. SELF INDUCTION

Self induction is that phenomenan where by a change in the current in a conductor induces an emf in the conductor itself. i.e. when a conductor is given current, flux will be produced, and if the current is changed the flux also changes, as per Faraday's law when there is a change of flux, an emf will be induced. This is called self induction. The induced emf will be always opposite in direction to the applied emf. The opposing emf thus produced is called the counter emf of self induction.

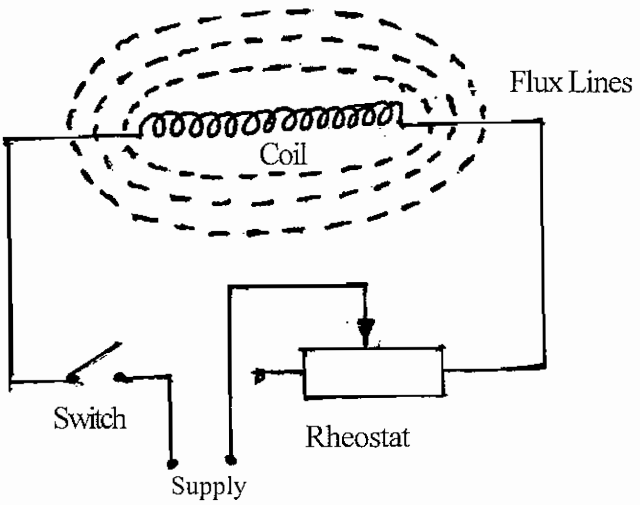

Fig. 4.11.1.

Uses of Self induction

1. In the fluorescent tubes for starting purpose and to reduce the voltage.
2. In regulators, to give reduced voltage to the fans.
3. In lightning arrester.
4. In auto- transformers.
5. In smooth choke which is used in welding plant.
6. In rectifiers to keep are stationary.

4.11.2. Mutual Induction

It is the electromagnetic induction produced by one circuit in the near by second circuits due to the variable flux of the first circuit cutting the conductor of the second circuit, that means when two coils or circuits are kept near to each other and if current is given to one circuit and it is changed, the flux produced due to that current which is linking both the coils or circuits cuts both the coils, an emf will be

produced in both the circuits. The production of emf in second coil is due to the variation of current in first coil known as mutual induction.

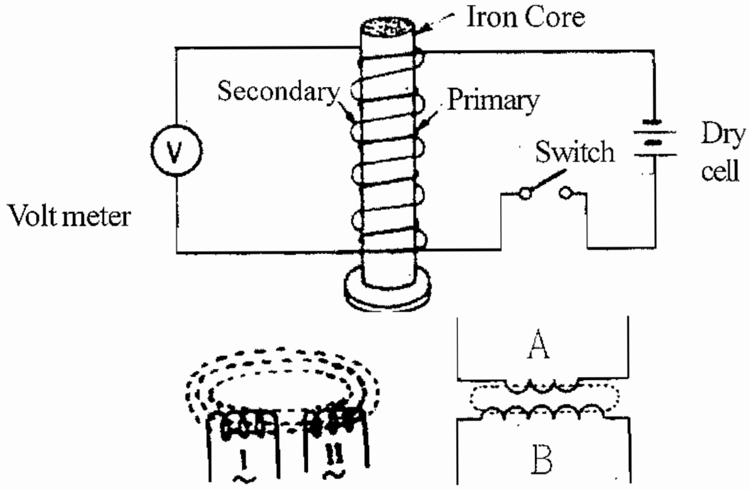

Fig. 4.11.2.

Uses:

1. It is used in ignition coil which is used in motor car.
2. It is also used in inductance furnace.
3. It is used for the principle of transformer

4.11.3. Len's Law

When an emf is induced in a circuit electromagnetically the current set up always opposes the motion or change in current which produces it.

Eddy current

When the armature with conductors rotates in the magnetic field and cuts the magnetic lines, an emf will be induced in the conductors. As the armature is made of a metal and metal being a conductor, emf will be induced in that metal also and circulate the current called eddy current. These current produces some effects which can be utilized.

This current are also called as Focault current.

Methods of Minimising Eddy Current

Eddy current always tends to flow at the right angles to the direction of the flux, if the resistance of the path is increased by laminating the cores. The power loss can be reduced because the eddy current loss varies as the square of the thickness of the laminations.

4.12. MAGNETIC HYSTERESIS

It may be defined as the lagging of magnetisation or Induction flux density (B) behind the magnetising force (H). It may also be defined as a quality of a magnetic substance due to which energy is dissipated in it on the reversal of its magnetism.

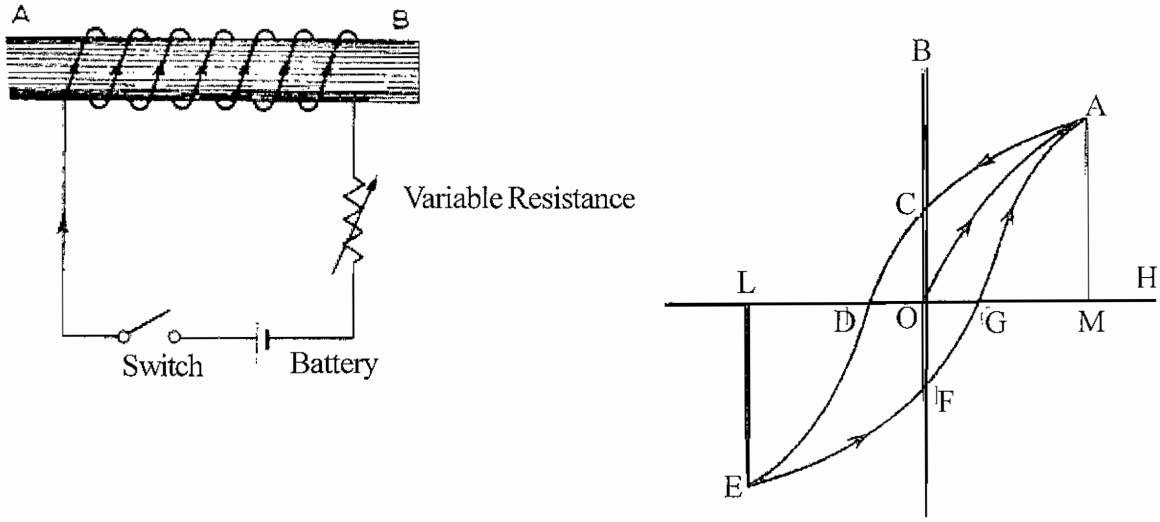

Fig. 4.12.

Hysteresis Loop

Let us take an unmagnetised bar of iron AB and magnetise in by placing it within the magnetising field of a solenoid (H). The Field can be increased or decreased by increasing or decreasing current through it. Let 'H' be increased in step from zero up to a certin maximum value and the corresponding of induction flux density (B) is noted. If we plot the relation between H and B, a curve like OA, as shown in fig, is obtained. The material becomes magnetically saturated at H = OM and has, at that time, a maximum flux density, established through it.

If H is now decreased gradually (by decreasing solenoid current) flux density B will not decrease along A0 (as might be expected) but will decrease less rapidly along AC. When it is Zero B is not zero, but has a definite value = OC. It means that on removing the magnetising force H, the iron bar is not completely demagnetised. This value of B (=OC) is called the residual flux density.

To demagnetise the iron bar we have to apply the magnetising force H in the reverse direction. When H is reversed by reversing current through the solenoid, then B is reduced to Zero at pointD where H = OD. This value of H required to wipe off residual magnetism is known as coercive force and is a measure of the coercivity of materials i.e. its 'tenacity' with which it holds on to its magnetism.

After the magnetisation has been reduced to zero value of H is further increased in the negative i.e. reverse direction, the iron bar again reaches a state of magnetic saturation represented by point E. By taking H back from its value corresponding to negative saturation (=OL) to its value for positive saturation (=OM), a similar curve EFGA is obtained. If we again start from G, the same curve GACDEFG is obtained once again.

It is seen that B always lags behind H the two never attain zero value simultaneously. This lagging of B, behind H is given the name Hysteresis' which literally means 'to lag behind.' The closed loop ACDEFGA, which is obtained when iron bar is taken through one complete cycle of revesal of magnetisation is known as Hysteresis loop.

Energy stored in a magnetic field

For establishing a magnetic field, energy must be spent, though to energy is required to maintain it. Take the example of the exciting coils of an electromagnet. The energy supplied to it is spent in two ways, (1) Part of it goes to meet I^2R loss and is lost once for all (ii) part of it goes to create flux and is stored in the magnetic field as potential energy, and is similar to the potential energy of a raised weight, when a mass M is raised through a height of H, the potential energy stored in it is mgh. Work is done in raising this mass, but once raised to a certain height. No further expenditure of energy is required to maintain it at that position. This mechanical potential energy can be recovered so can be electric energy stored in a magnetic field.

When current through an inductive coil is gradually changed from Zero to a maximu, value then every change of its is opposed by the self-induced emf. produced due to this change. Energy is needed to over come this opposition. This energy is stored in the magnetic field of the coil and is, later on, recovered when those field collapse.

Questions

Part A

I. Choose the Correct Answer

1) Ferro magnetic substance are

a) Good insulator
b) good conductor
c) the same as that of diamagnetic material
d) Strongly attracted by a magnet.

2) Unit of flux is

a) Ampere b) Webber c) Watts d) None of these

3) Para magnetic substance are:

a) Weakly attracted by a magnet
b) The same as that of dia magnetic meterial.
c) Weakly repelled by a magnet
d) Produced by heating iron above the curic point.

4) The mmf can be compared with

a) the force of attraction between two magnetic force
b) the force of Repulsion between two magnetic force
c) the force of earth magnetic field.
d) the electro magnetic force.

5) The reluctance can be compared with

a) Conductance b) Inductance c) Resistance d) capacitance

6) The magnetic flux can be compared with

a) Electro static flux b) Electric current c) Magnetic current d) Magneto motive force.

7) A solenoid is defined as an electromagnet,

a) having only one turn
b) having more axial length than diameter
c) Less axial length than diameter
d) having more resistance.

Part - B

II. Answer the following questions in one word

1) What are the types of magnet?

2) How many poles are their in a magnet?

3) What is the unit of magnetic flux?

4) What is the unit of Reluctance?

5) If the direction of current in the two conductors is same which force they will experience?

6) If the direction of current in the two conductor is in opposite direction which type of force is resulted?

7) What is B denotes in Electro magnetism?

Part- C

III. Answer the following questions in briefly

1) What are the kinds of magnetic meterials?

2) Define Flemings right hand rule?

3) Define lenz's Law?

4) Define Faradays Law?

5) Define maxwell cork's screw rule?

6) What is magnetic repulsion?

Part - D

IV. Answer the following questions in one page level

1) Explain magnetic materials?

2) Compare electrical circuit and magnetic circuit?

3) Explain - Solenoid with neat sketch.

Part - E

V. Answer the following questions in two page level

1) Explain magnetic Hysteresis?

2) Explain the type of Electromagnetic induction with neat diagram?

5. ELECTRICAL EFFECTS

5.1. INTRODUCION

Electricity is used in different ways for different purpose. Depending upon the usage, electricity is transformed into different energy. For example.

i). Electric energy is converted into light energy. Eg. Electric lamps, Tube light.

ii). Electric energy is converted into sound energy. Eg. Electric bell, Buzzer

iii) Electric energy is converted into heat energy. Eg. Heater, Iron box.

iv) Electric energy is converted into Electromagnetic energy. Eg. Electro magnetic circuit breaker, Telegraphic machine.

v). Electric energy is converted into Electro chemical energy. Eg. Electroplating & Battery Charging.

vi) Because of Electromagnetic induction principle, it is used in Induction motors and transformers.

5.2. Electrical energy is converted into light energy,

Ex:- Incandescent Lamp, Tube light.

5.2.1. Incandescent lamp

The filament of this lamp is heated up to the incandescent stage of heat. So this type of lamps are called Incandescent lamp. They are two types,

1. Vacuum lamp

2. Gas filled lamp

Fig. 5.2.1.

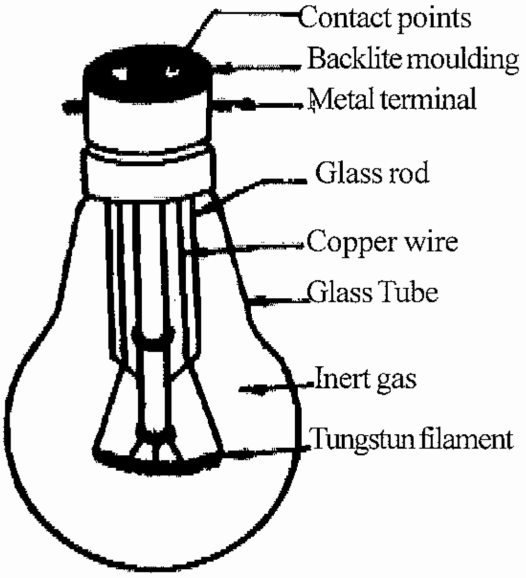

In this type of lamp the sphere shaped glass cover is used. The glass stem is fixed in the centre of lamp. In this stem support wires are fixed for holding the filament. The top of the lamp is sealed and pins are fixed for fixing the lamp in the holder.

Vacuum lamp

In this lamp the air is evacuated to protect the filament from burning by oxygen mixed in the air when heated due to the current that passes through the high resistance filament. The moving electro creates friction. So the heat is generated in the filament when the heat rises up to the incandescent stage, the light is emitted from the filament. The emitted light is reflected by sphere shape glass cover.

Gas filed lamp

In the evacuated lamp, the filament evaporats and deposit on inside of the glass cover afterlong use and make black shade on the glass cover. To rectify this disadvantage, inert gasses are filled in this lamp. Presence of inert gas causes heat loss to compensate the heat loss, the filament is made as coiled coil, Increase in length of the filament leads to the increase in power.

5.2.2. Tube light

Fig. 5.2.2.

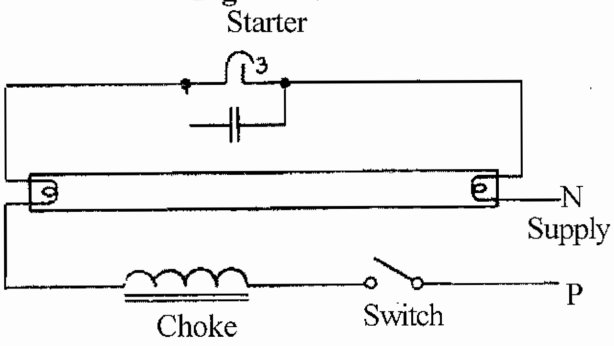

In this type a long glass is used. Inside the glass tube the fluorescent paste is coated. The two end of the glass tube is covered and low pressure inert gas and mercury are filled in this tube. The electron emitting filaments are fixed at both the ends, one end of each filament is connected though a choke to the supply. In this choke there is a coil wound over the core. There is a starter connected between the two ends of the filament. In this starter a small glass bulb is fixed, in this bulb inert gas is filled and a bi-metallic strip is fixed.

Working Principle

This lamp functions based on the principle of current passing through a Air medium. The Air medium the resistance falls down heavily. When this current passes to the lamp the circuit is closed through choke, filament, and starter. So the 230V supply voltage is applied between the starter terminals Due to this voltage, current starts flowing through the inert gas in the starter. Now, the bimetallic strip rised touch each other as the temprature of inert gas has increased. Once the circuit is complete through the bimetallic strip and the filaments in the tube light the bulb will be glowing.

The inert gas in the starter cools down and the bimetallic strip open again. Therefore the current

through the choke decreases and hence the magnetic flux. The decreasing (or alternating) flux is cut by the choeke winding which causes self induced emf in the choke coil.

The induced emf is near about 1200V. This voltage is applied betweeen the filament of the tube light causing electron flow between the filaments and through the inert gas of the tube light. The electron collition in to the inert gas produces the ultra violet rays. These rays impinge on the phospher coating, and ligh is emitted by the coating.

After the light started 110V is enough for the light, the balance 120V voltage of the supply voltage is dropped across the choke.

5.3. ELECTRICAL ENERGY IS CONVERTED INTO SOUND ENERGY

Ex. Electric bell, Buzzer

5.3.1. Electric Bell

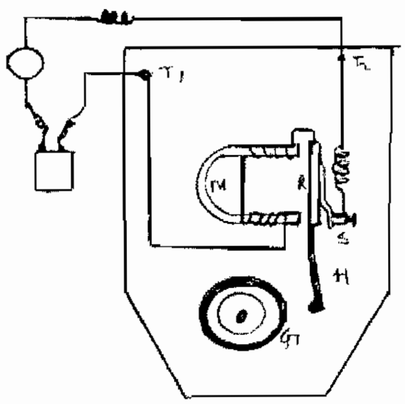

Fig. 5.3.1.

Electrical bell consists of horse shoe type electromagnet. The two coils wound on it in such a way as to produce opposite polarity. Soft iron piece called armature completes the magnetic circuit between two ends of shoe electromagnet. This armature is carried on a flat steel spring fixed at one end and free to move through a small distance at the other end. At the free end spring carries a movable contact. This movable contact normally touches the fixed contact which can be adjusted by means of contact screw. When push button is pressed, current flows through the electromagnet which gets energized. This attracts armature to which is attached to hammer. This makes hammer to hit against gong giving sound. Attraction of armature breaks the circuit at contact points and electromagnet gets de-energized. This brings back armature to its original closed circuit position under the action of spring. The sequence of events repeats and we get interrupted sound of bell.

5.3.2. Buzzer

Buzzer in principle is a bell without hammer and gong. Vibration of armature gives out dull noise instead of harsh annoying noise of gong incase of electric bell.

5.4. ELECTRICAL ENERGY IS CONVERTED INTO ELECTROMAGNET ENERGY.

Ex : Electrical energy is converted into Magnetic circuit breaker, telegraphic machine.

5.4.1. Magnetic Circuit Breaker

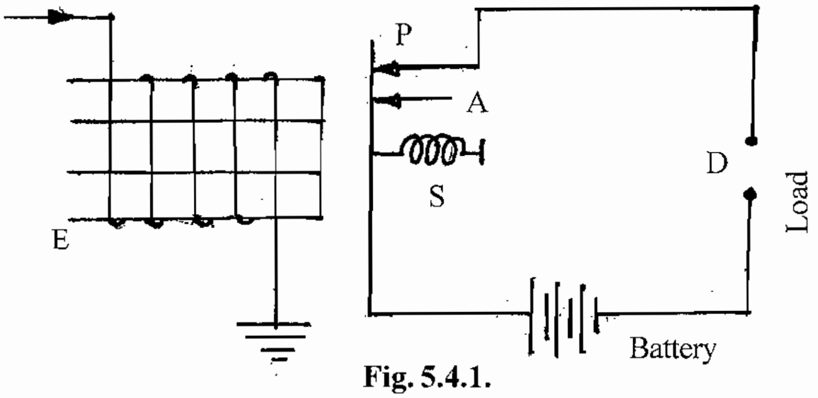

Fig. 5.4.1.

Electric supply is given to the apparatus D from the battery. The conductor A always touches terminal P with the help of spring. The electromagnet E attracts conductor A, if the current flow is beyond specified limit. The apparatus isolated from electric supply due to terminal P. If current through electromagnet is reduced, attraction also reduces. The conductor A retain its place and operate the apparatus.

5.4.2. TELEGRAPHIC MACHINE

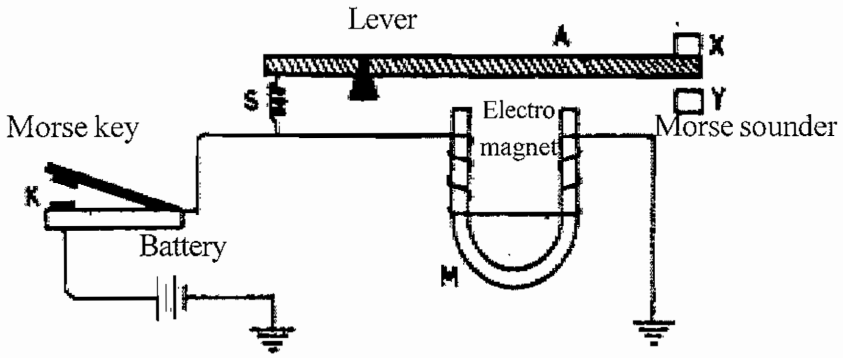

Fig. 5.4.2.

The American scientist Morse found Telegraphic machine. Which is used to send the message from one place to another. The machine part sends the message is 'Morse Key' and the machine part receives the message is 'Morse Sounder'.

The battery circuit closes through morse key K and electromagnet M. The lever is placed on the electromagnet. The lever touches nail Y due to spring, the electromagnet lever whenever the morse key pressed. The lever make a sound on touching nail Y. Whenever the morse key is not pressed, since the morse key and more sounder are in different place, one end of the machine is earthed. Earth acts as a conductor, we will make a sound in the more sounder on pressing and releasing morse key. Messages passes through this sound.

5.5. ELECTRICAL ENERGY IS CONVERTED INTO HEART ENERGY

Ex. Heaters, ironbox

5.5.1. ELECTRIC HEATERS

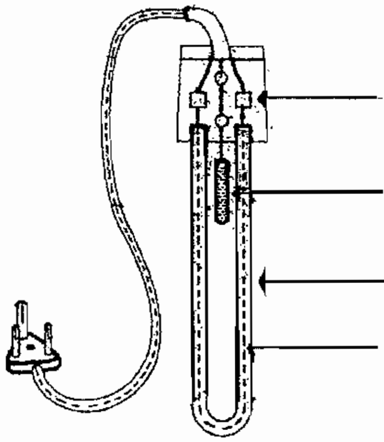

Fig. 5.5.1.

This type of heater is immersed in water. It is cheap and portable. It is made of a chromed iron or brass pipe in which a heating element is placed. Around the element there is an insulation so that it may not touch the pipe. Full rod has to be replaced when found defective.

5.5.2. Electric Iron box

In Iron Box electric is converted into heat energy. The metal casing at the bottom of the iron box gets heated and used for ironing.

Sole Plate

A soft Iron plate at the bottom gets heated and it is used for ironing clothes. Heating element is fixed inside the box. It gets heat and transfers to the sole plate. The sole plate is not connected directly to the electric power supply only the heat is transferred from the heating element.

The handle and other parts are fixed with the plate by welding. The sole plate is finished by suface grinding and chromium coating is applied over the plate for smoothness.

Mica

The heating element is placed in between the mica sheets. Mica is an insulator and also it can withstand high temperature. The asbestos sheet placed over the upper. Mica sheet prevents heat transfer to the upper portion of the iron box. So, it prevents passeage of current to the handle and to the sole plate.

Heating Element

Heating element is an alloy with the mixer of Nickel and Chromium. It is fixed inside a mica sheet and the two ends are coveniently fixed for giving electric supply. The heating element offers high resistance to the flow of current, hence gets heated to a high temprature. It is rolled into few turns for better heating results and long life.

Pressure plate

It is heavy iron plate placed over the Asbestos Sheet to apply sufficient pressure on the clothes. It is fixed firm with the sole plate with the help of screws. This arrangements holder the healthy element, mica and asbestos sheet intact.

Cover plate

It act as a cap which covers the bottom and all other parts inside the box. On top of the cover plate, handle, thermostat adjustment knob, power socket are fixed. The handle is generally made up of bakelite.

Handle

Handle is made up of bakelite or ebonite because it offers high resistance to flow current and it can withstand more heat. The indicator lamp and power socket are fixed in the handle.

Non-Automatic Iron Box

In this type of iron box the heating element transfers the heat to the sole plate continously. After the sole plate gets the required heat,we have to disconnect the supply. Then the heat reduces on its own. Then again for the required heat we have to switch on the supply.

5.6. Electrical energy is converted into chemical energy

Ex : Electro Plating and Battery Changing

5.7. Electrical energy is converted into Mechanical energy

Ex: Motor

5.7.1. DC Motor

DC Motor converts electrical energy into mechanical energy. It operates only in DC supply. A DC machine may be operated either as generator or as motor. DC motor working in Faraday's law of Electro magnetic induction, DC motor rotates the director of motion is given by fleming's left hand rule.

Questions

Part - A

I. Choose the Correct Answer

1) Electrical Energy Converted by tube lamp is

a) Heat energy b) Light energy c) Sound energy d) None of these.

2) In battery the electrical energy is converted into

a) heat energy b) Sound energy c) Chemical energy d) Mechanical Energy

3) In Electric motor the Electrical Energy is converted into,

a) Chemical energy b) Mechanical energy c) heat energy d) light energy

4) In Iron Box the Electrical energy is converted into

a) Sound energy b) heat energy c) Mechanical energy d) light energy.

5) The electric bell working with,

a) Permanent magnet b) Electro magnet c) Dia magnet d) none of these.

6) The heating element made of,

a) Niekrome b) Cromium c) Thongston d) Copper

7). Circuit breaker is working as

a) Magnetic energy b) Chemical energy c) Sound energy d) None of these.

Part - B

II. Answer the following questions in one word

1) Give an example to convert electrical Energy to mechanical energy.

2) Give an example to convert electrical Energy to chemical energy?

3) Give an example to convert electrical energy to sound energy?

4) Is the mica used as a Insulator?

5) What is the stationary part of motor?

6) The electro plating depends upon which effect?

Part - C

III. Answer the following questions in briefly

1) What are the types of incandecent lamp?

2) What is buzzar?

3) Write the parts of Iron Box?

4) What are the types of heating appliances?

5) What is incandecent lamp?

Part - D

IV. Answer the following questions in one page level

1) Draw the neat sketch of incandecent lamp?

2) Explain magnetic circuit breaker?

3) Explain Electric heater with neat diagram?

Part - E

V. Answer the following questions in two page level

1) Explain the working principle of tube lamp?

2) Explain the working principle of Electric Bell with neat diagram

6. CELLS AND BATTERY

6.1. INTRODUCTION

Commonly Generators produce electricity at hydroelectric power station. In thermal power station the electrical power produced by heat energy, in atomic power station by means of atomic energy, in windmills power station by means of wind power the electricity is normally produced. Chemical energy is transferred as electrical energy in battery in small scale.

6.1.1. Cell

When chemical energy is transferred as electrical energy in batteries, the current flows in outer circuit from positive terminal to negative terminal, the electrons from (-) negative terminals to (+) positive terminal in inner circuit. These Batteries are classified into two types.

1. Primary Cell

2. Secondary Cell

6.1.2. Primary Cell

In primary cell the chemical energy is transferred as electrical energy by chemical reaction. It finally reaches a state of discharge when it can no longer deliver current. It can't be recharged again. Such a cell generally has to be replaced.

Primary cells are classified as

1. Dry cell

2. Wet cell (Example : Leclanche cell, Daniel cell)

6.1.3. Secondary Cell

In a secondary cell the chemical action taking place to produces electricity when discharging. This process is reversed while charging. When the cell is discharging, the chemical energy is transferred as electrical energy and taken out. Sending a current through the electrolytes can reverse the condition of the electrolyte. Thus the electrodes and the electrolyte are restored to the original condition. This process is called 'charging.'

Secondary cells are also called as 'Accumlator' and as Storage cell.

The secondary cells are classified as

a) Lead Acid cell

b) Alkaline cell

6.1.4. Comparison between Primary cell and Secondary Cell

S.No.	Primary Cell	Secondary Cell
1.	These cells produce electrical energy by themselves	Electrical Energy is produced only when it is fully changed.
2.	After discharging the current it cannot be recharged	It can be charged and recharged again and again
3.	In this chemical energy is converted into electrical energy	Electrical energy is converted into chemical energy and again the action is reversed.
4.	Short life	Long life
5.	Low power output	High power output
6.	Low efficiency	High efficiency
7.	Weight less	Heavy weight
8.	Low cost	costly
9.	Less maintenance	High Maintenance

6.2. TYPES OF PRIMARY CELL

Types

There are two types in primary cell 1. Wet cell 2. Dry cell.

1. Wet cell:

Under Wet cell, there are few types. They are Volta cell, Daniel cell, Laclanche cell, Bichromate cell and Bunsun cell.

6.2.1. Voltaic Cell

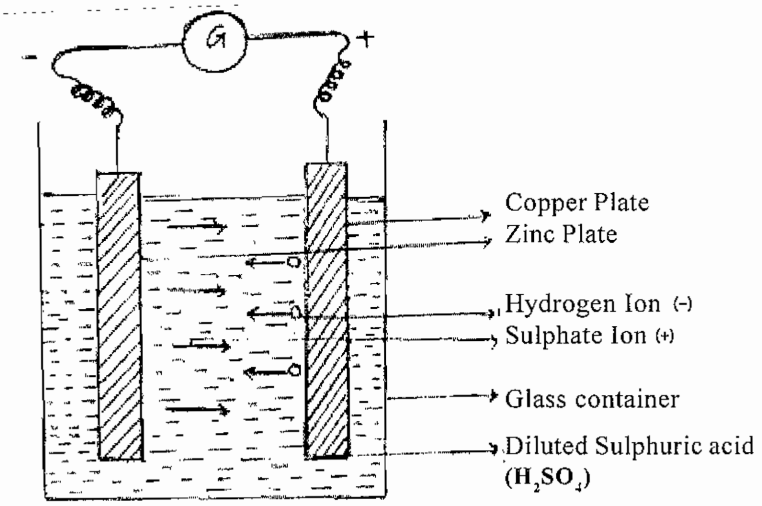

Fig. 6.2.1

Volta (1800) was the first to set up a cell which would give a continuous current. Hence it was named (Volta cell) after him.

Construction

It consists of a glass vessel with a copper and a zinc plate dipped into a dilute sulphuric acid solution. On connecting the two electrodes externally with piece of wire, current flows from copper to zinc outside the cell and from zinc to copper inside it. The copper electrode is positive pole or anode of the cell and zinc is negative pole or cathode of the cell. The electrolyte is dilute sulphuric acid.

Working principle

The electrolyte is dilute sulphuric acid. As the plates are immersed in the acid due to chemical reaction hydrogen ions reaches copper and sulphate ions reaches zinc plate. So copper become anode and zinc become cathode. If these two terminals are connected by a conductor, current flows. This can be seen by the deflection of a galvanometer. EMF of the cell is 1V.

Defects

Local action and polarization are the trouble shooting in the volta cell.

Defects of a simple cell

With a simple voltaic cell, the strength of current gradually diminishes after some time.

- Local action

- Polarisation

Local action

In a simple voltaic cell, bubbles of hydrogen are seen to evolve from the zinc plate even on open circuit. This effect is termed local action. This is due to the presence of impurities like carbon, iron, lead, etc. in the commercial zinc. This forms small cells on the zinc plate and reduces the strength of current of the cell.

The local action is prevented by amalgamating the zinc plate with mercury. To do so, the zinc plate is immersed in dilute sulphuric acid for a short time, and aftewards, mercury is rubbed over its furface.

Polarisation

As current flows, bubbles of H_2 evolve the copper plate on which they gradually form a thin layer. Due to this the current strengh falls and finally stops altogether. This effect is called the polarisation of the cell.

Polarisation can be prevented by using some chemicals which will oxidize the hydrogen to water before it can accumulate on the plate. The chemicals used to remove polarisation are called de-polarisers.

6.2.2. Daniel Cell

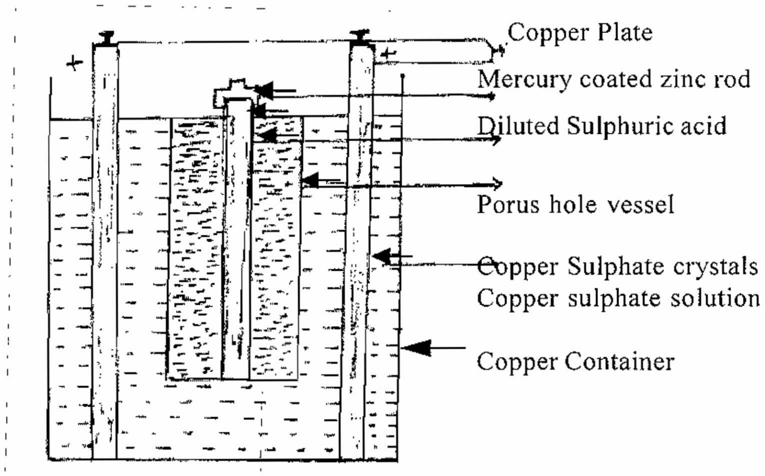

Fig. 6.2.2.

It is a modification of the simple cell with copper sulphate solution as depolarizer. Instead of copper plate a copper vessel which contains the fluid of the cell is used, the vessel itself is being the positive pole. The negative pole is an amalgamated zinc rod which stands in a porous pot inside the copper vessel. Dilute sulphuric acid is placed in the porous pot.

The copper sulphate solution contains Cu^{++} and SO4 ions. This positive ions which are driven on to the copper plate are copper ions instead of hydrogen ions and no layer of hydrogen bubbles is formed on the surface of the plate and polarization is prevented, when the cell is not in use the porous pot and zinc should be removed and emptied. EMF produce is 1.1V. Internal resistance is 2 ohms. These cells are used in laboratory.

6.2.3. Leclanche cell

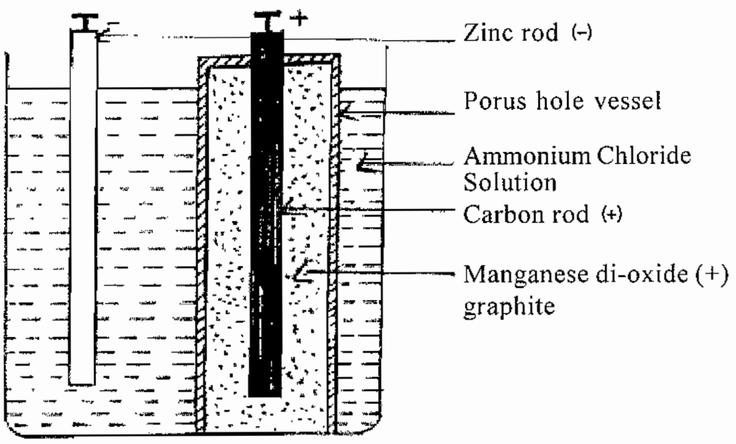

Fig. 6.2.3.

A Leclanche cell consists of a carbon electrode (anode) packed in a porous pot containing manganese dioxide and charcoal powder. The porous pot is immersed in a saturated solution of ammonium chloride (electrolyte) contained in an outer glass vessel. A zinc rod (cathode) is immersed in electrolytic solution.

At the cathode due to oxidation reaction Zn tom is converted into Zn++ ions and 2 electrons. Zn++ ions reacting with ammonium chloride will produces zinc chloride and ammonia gas. Ammonia gas escapes. The hydrogen ions diffuse through the pores of the porous pot and react with manganese dioxide. In this process the positive charge of hydrogen ion is transferred to carbon rod. When zinc rod and carbon rod are connected externally, current flows from carbon to zinc. The emf of cell is about 1.5V. Internal resistance is 5 ohms.

These type of cells are used in telephones, telegraphic equipments.

6.2.4. Dry cell

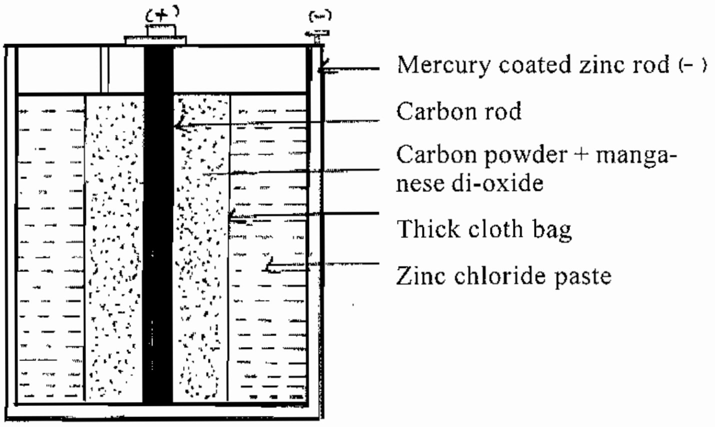

Fig-6.2.4

The glass jar in a Leclanche cell is replaced by a zinc container which itself acts as a negative electrode. The ammonium chloride solution is replaced by the moist paste made from a mixture of plaster of paris, ammonium chloride and zinc chloride called sal ammoniac paste. This forms the electrolyte of the cell. Zinc chloride is hygroscopic in nature and helps to maintain the moistness of the paste. The porous pot is replaced by a canvas wrapping. The carbon rod forms the positive electrode. This is surrounded by MnO2 and powdered carbon. The powdered Carbon reduced the internal resistance of the cell. The top of cell contains a layer of saw dust. This acts as the base for the top layer of bitumens used for sealing purposes. A vent is provided in this layer to allow the gases formed in the chemical reactions to escape. The emf of cell is 1.5V. These type of cells are used in torch lights, radios, wall clocks etc.

6.3. BATTERY

More than one or two cells when connected in series or parallel connection it is called as Battery. For example if a cell has 1.5V and if we need 3V or 6V then we can get it by connecting two cells or four cells. So cells are often arranged in groups to form batteries. There are two main methods in connecting them.

Series Method

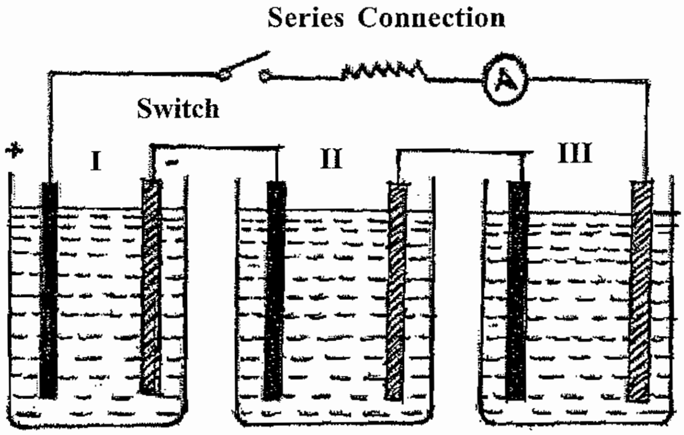

Fig. 6.3

The negative terminal of one is connected to the positive terminal of the next through out the battery. In this case the total voltage of the battery is the sum of the voltages of each cell. This method is employed in Telephone exchange, Telegraph etc.

6.3.1. Parallel Method

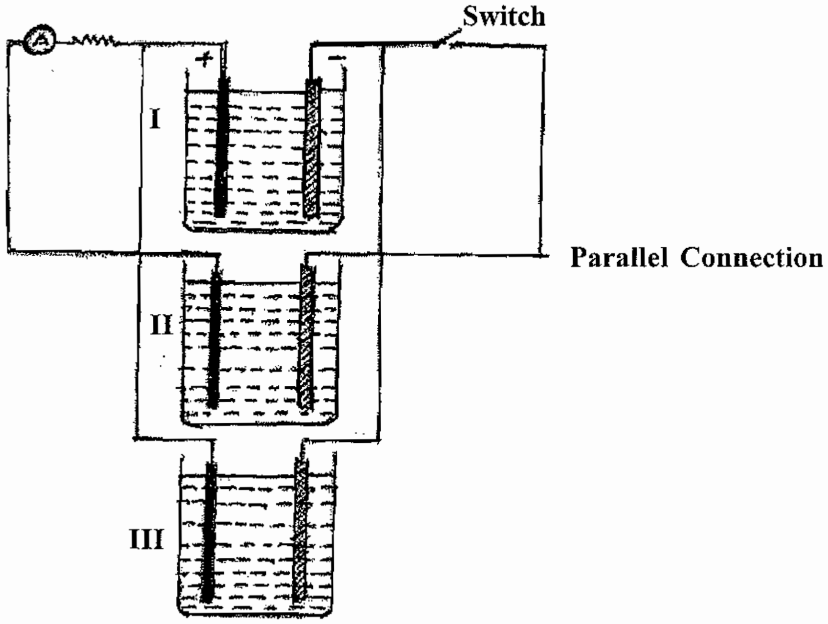

Fig. 6.3.1.

The negative terminals of the batteries are connected together and formed as one terminal and all the positive terminals are connected together and formed as another terminal. These terminals are output terminals of the battery. In this type, the voltage of the battery is equal to the voltage of the single cell. But the Ampere rating is high since it has less resistance. This battery will work even if any one of the cell is damaged or disconnected. This type is used where high ampere rating is needed.

6.4. STORAGE BATTERIES

Types of Secondary Cells

Secondary cells may be classified under the following heads:

a) Lead Acid cell

b) Alkaline cell eg. Nickel iron cell, Nickel cadmium cell

Lead acid cell is generally used in vehicles.

6.4.1. Lead Acid accumulators

The constructional features of a lead acid cell can best be understood by studying its parts. The parts are the 1.Container 2.Plates 3.Strap and terminal pillar 4.Separator 5. Electrolyte 6. Cell cover and 7. Vent plug.

The outer container made up of hard rubber, bakelite, celluloid or bitumen. The Electrolyte used in this is diluted sulphuric acid. Lead plates are kept as positive and negative plates. One excess negative plate is kept to reduce internal resistance and increase more current. Separator (made of rubber, ebonite, glass) are placed in between the positive and negative plate to prevent any possibility of short circuit between them. The bottom of the plate is rest on the top of the ribs. The top of the container is sealed but one vent hole per cell, arranged such that the acid will not splash due to shake.

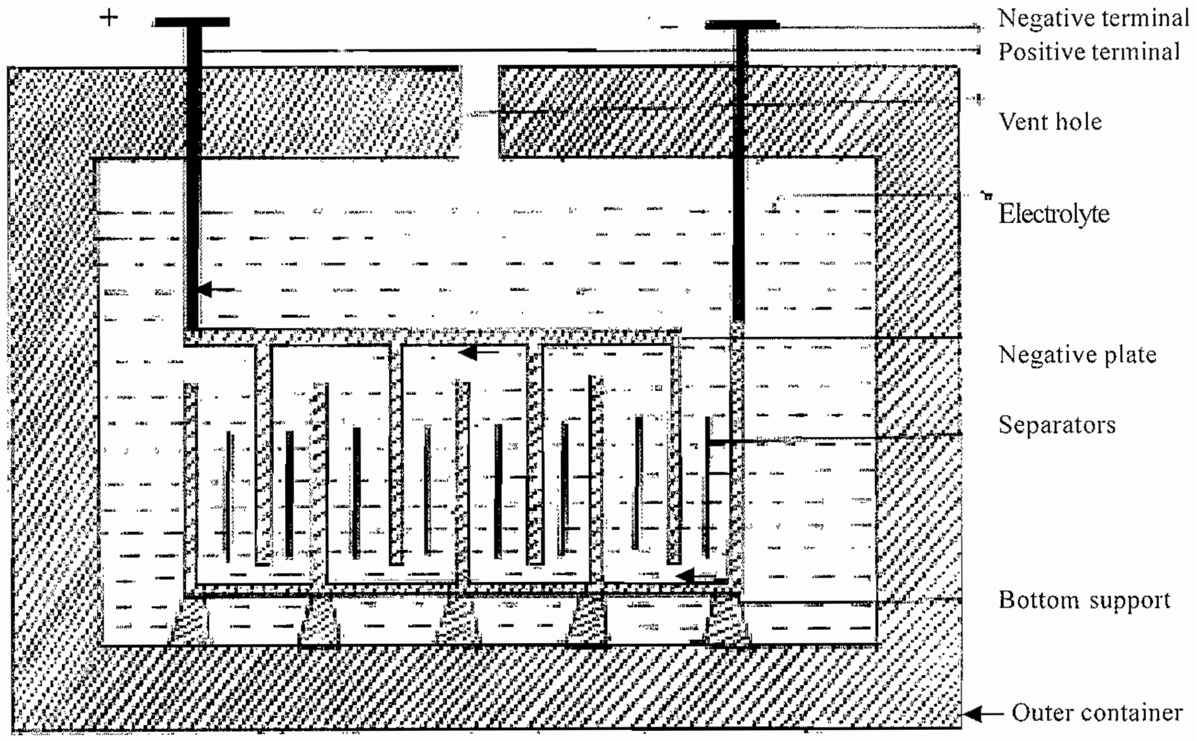

Fig. 6.4.1.

Working principle

Firstly, a strong dc supply is given through positive and negative terminals. This current is passed for certain period of time. Now hydrogen is liberated at that set of plates connected to the negative of the source. This makes these plates spongy. At the positive plates, the liberated oxygen combines to form lead peroxide. This process is called charging. Charging process is done till the acid reaches its required specific gravity. If now the original source of current is disconnected and the two plates are connected to an ammeter, it shows the current flow.

The container is filled three parts of distilled water and one part of concentrated sulphuric acid. Before charging, the specific gravity of the acid should be 1.15 and after charging, the specific gravity should be 1.26. This can be measured by using hydrometer. The emf should be 2.25V

Chemical Reaction During Discharging

When the cell is discharging, current flows in the external circuit from positive to negative. The flow of current through the electrolyte splits into $H_2^+$and So_4^- ions.

- Both the positive and negative plates are slowly converted in to lead sulphate.
- Water is formed during discharge. So that the acid becomes more and more diluted.
- Decrease in emf.

Chemical Equation

During discharge

(Positive Plate)

Lead peroxide		Hydrogen		Sulphuric Acid	Lead Sulphate		Water
PbO_2	+	H_2	+	H_2SO_4	$PbSO_4$	+	$2H_2O$

(Negative Plate)

Pure lead	+	Sulphate	=	Lead sulphate
Pb	+	SO_4		$PbSo_4$

During Charge

Positive plate

Lead	+	Sulphate	+ Water	Lead peroxide + Sulphuric acid
$PbSo_4$	+	SO_4	+ $2H_2O$	PbO_2 + $2H2SO_4$

(Negative Plate)

lead Sulphate	+	Hydrogen	Lead	+	Sulphuric acid
$PbSO_4$	+	H_2	Pb	+	H_2SO_4

Sulphate

- 90% of stored energy can be used.
- Coating of red oxide is done over lead plates to avoid corrosion.
- To get large steady current, batteries should be connected in parallel.

Precautions

- Battery should not be kept under discharge condition for long period.
- The level of the electrolyte must be 2cm above the plates.
- When the level of the electrolyte decrease, distilled water should be added.
- The charging and discharging process should be done in constant speed.
- During charging vent plug should be loosen, so that gases can be easily evolved.
- Avoid fires near batteries.
- While preparing an electrolyte, acid should be added drop by drop to the water.
- The batteries should be fixed firmly in the vehicle.
- Avoid loose connection in the terminal loops.
- While charging, the voltage should be more than 10% of the battery voltage.

6.4.2. Alkaline cell

In this type of cell instead of sulphuric acid, potassium hydroxide is used.

There are two types

1. Nickel iron cell

2. Cadmium cell

Nickel iron cell

Construction

Its positive plates consists of nickel plated iron tubes packed with nickel hydroxide. Its negative plate consists of similar tubes filled with finelym oxide iron. The electrolyte is a solution of potassium hydroxide which gives positive potassium and negative hydroxylamine.

$KOH = K^+ + OH^-$

The container is of nickel plated steel and nowadays even plastic. The addition of small amount of lithium hydroxide is found to increase the capacity of the cell.

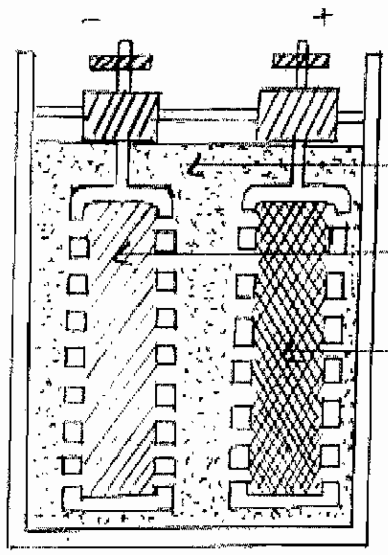

Fig 6.4.2.

Characteristics of Alkaline cell

1. Robustness, mechanically strong and can stand vibrations.
2. High internal resistance.
3. Life time is approximately 5 years.
4. At fully charged condition its emf is 1.75v and during discharging condition its emf is 1.2v
5. The rate of discharging should not be below 1.15v

6.4.3. Difference between Lead acid cell and Nickel iron cell

Lead acid cell	Nickel acid cell
1. Positive plate is lead per oxide	Positive plate is nickel hydroxide.
2. Negative plate is lead plate.	Ferrous hydroxide powder is Negative plate.
3. Electrolyte used is diluted	Potassium hydroxide is used. Sulphuric acid .
4. Average emf is 2.2v	Average emf is 1.1v
5. It is heavy and not easily portable.	Light weight, easily portable.
6. Internal resistance is low.	Internal resistance is high.
7. Less cost.	More cost.
8. Period of charging is longer.	Period of charging is shorter.

6.4.4. TROUBLE SHOOTING IN THE BATTERY

Three types of defects occurs in the battery.

1. Sulphation 2. Sedimentation 3. Plates buckling.

Sulphation

If the cell is discharged too far or left standing for long unused , the acid attacks the plate and may form a very high deposit of lead sulphate on them. This is called sulphation. To avoid this battery should not be kept unused for long time, higher speed of charging and discharging should be avoided. During charging low current with long period should be followed.

Sedimentation

When the particles deposited on the positive plate dissolves in the electrolyte , short circuit may occur. If it happens the electrolyte should be changed.

Plates Buckling

If the rate of charging and discharging is higher, the plates become unshaped . If it happens the plate should be replaced.

6.4.5. Symptoms of fully charged Batteries

- Oxygen is liberated from anode and hydrogen is liberated form cathode.
- EMF should be approximately 2.1V
- Specific gravity of the electrolyte should be more than 1.2.
- Positive plate in chocolate colour.
- Negative plate is state grey in colour.

6.4.6. Capacity of an Accumulator

The capacity of an accumulator is given either by its watt hour rating or by its ampere hour rating. The ampere hour rating is generally, used that is the product of current given out by the number of hours for which it can be taken. So the capacity of the battery depends upon number of plates used, its area and electrolyte used.

6.4.7. Efficiency

i) Ampere Hour Efficiency

The efficiency of a cell can be considered as below;

$$\text{Ag. Efficiency \%} = \frac{\text{Ampere hour on discharge} \times 100}{\text{Ampere hour on charge}}$$

Efficiency of lead acid cell is 90 to 95%

ii) Watt Hour efficiency

It is a ratio of watt hour of energy delivered by battery to the watt-hour supplied by source during charging.

$$\text{WH Efficiency} = \frac{\text{Discharge (Current x Time x Voltage)}}{\text{Charge (Current x Time x Voltage)}}$$

6.5. TESTING OF BATTERY

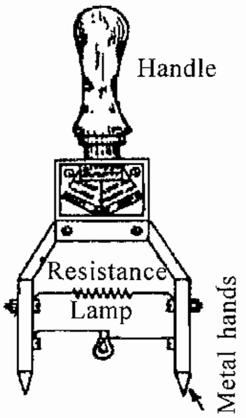

Fig.6.5

For testing a battery we use cell tester. In fully charged battery the emf is 2.2V if we increase the rate of discharge the capacity of the cell decreases. So the cell tester (ie) a voltmeter with high resistance connected across the poles of a cell will approximately measure its emf. Cell tester should not be used for a longer time because it has high resistance, which in turn made a voltage drop on the cell. So the testing should be carried only for 1 or 2 minutes. If there is no varies in the voltage then the batter y is in good condition. If the voltmeter shows 1.8V then there is some defects. So the faults should be identified and rectified.

6.5.1. The method of charging secondary cells are

- constant current method

- constant potential method

- rectifier method

6.5.2. Constant current method

This method is used where the supply is high voltage DC220V, 110V etc. but the battery is of low voltage 6V, 12V etc. The emf of the battery is small in comparison to the supply voltage so a lamp-load or a variable resistor is connected in series with the battery. This causes a loss of energy, so, the method is inefficient.

Use : For charging more number of cells at constant current rating.

6.5.3. Constant potential method

In this method, the voltage is maintained at a fixed value about 2.3 V per cell; the current decreases as the charging proceeds. A variable resistor is connected in series, so a vltage source of 2.5 to 2.6 V per cell is required. For a 12V motor car battery, the charging dynamo is of about 15V. In comparison to the constant current method less power is wasted for charging and less time is taken.

Use : For charging batteries of constant voltage rating.

6.5.4. Rectifier method : A recitifier for battery charging is generally made of diodes connected in the form of a bridge. A transformer is used to step down the AC voltage to that suitable for diodes. Ammeter, voltmeter, switches and fuses are also used in the rectifier set.

6.5.5. Trickle charge : When the battery is charged at a very low rate, that is 2 to 3% of the normal rate for a long period, it is said to be a trickle charge.

Use : For central or sub-station batteries and for emergency lighting systems.

Initial charge : The first charge of a new, previously uncharged battery is called the initial charge. The process that occurs inside the battery is called forming the cells.

To conduct an initial charge, fill the cells with an electrolyte of a proper specific gravity, then replace the vent plugs. Make sure the holes in the plugs are clear. The battery should also be cool before you begin the initial charge.

Freshening charge : When a new battery is put into service for the first time, it may be given a brief charge to ensure that it starts in a fully charged condition. This kind of charge is called a freshening charge. Normally all that is required is charging at the finish rate until no change in specific gravity or voltage occurs over a three hour period.

Boost charge : If a battery is in danger of becoming over-discharged during a working shift, you can give it a supplementary charge during a rest period. This boost charge is not a conventional method of charging the storage battery. It is not recommended as a standard procedure. It is generally a high rate charge of short duration, used only to ensure that the battery will last until the end of the shift.

6.6. WATCH CELL

Alkaline cells : Alkaline cells use a zinc container for the negative electrode and a cylinder of manganese di-oxide for the positive electrode. The electrolyte is made up of a solution of potassium hydroxide or an alkaline solution.

Alkaline cells are produced in the same standard sizes as carbon-zinc cells but are more expensive. They have the advantage of being able to supply large currents for a longer priod of time. For example, a standard 'D' type 1.5 V alkaline cell has a capacity of about 3.5 A.h compared with about 2 A.h. for the carbon-zinc type. A second advantage is that the alkaline cell has a shelf life of about two and a half years as compared to about 6 to 12 months for the carbon-zinc type.

Mercury cells : Mercury cells are most often used in digital watches, calculators, hearing aids and other miniature electronic equipment. They are usually smaller and are shaped differently from the carbon-zinc type. The electrolyte used in this cell is alkaline and te electrodes are of mercuric oxide (cathode) and zinc (anode).

Silver oxide cells : Silver oxide cells are much like mercury cells. However, they provide a

higher voltage (1.5V) and they are made for light loads. The loads can be continous, such as those encountered in hearing aids and electronic watches. Like the mercury cell, the silver oxide cell has good energy-to-weight and energy-to-volume ratios, poor low-temperature response, and flat output voltage characteristics. The structures of the mercuric and solver oxide cells are very similar. The main difference is that the positive electrode of the silver cell is silver oxide instead of mercuric oxide.

Lithium cells : The lithium cell is another type of primary cell. It is available in a variety of sizes and configurations. Depending on the chemicals used with lithium, the cell voltage is between 2.5 and 3.6V. Note that this voltage is considered higher than in other primary cells. Two of the advantages of lithium cells over other primary cells are :

- longer shelf life - upto 10 years

- higher energy-to-weight ratio upto 350 Wh/Kg

Lithium cells operate at temperatures ranging from -50 to +75°C. They have a very constant output voltage during discharge.

Uses : Primary cells are used in electronic products ranging from watches, Smoke alarms, cardiac pacemakers, torches, hearing aids, transistor radios etc.

6.7. STATIC UNINTERUPTABLE POWER SYSTEM (UPS)

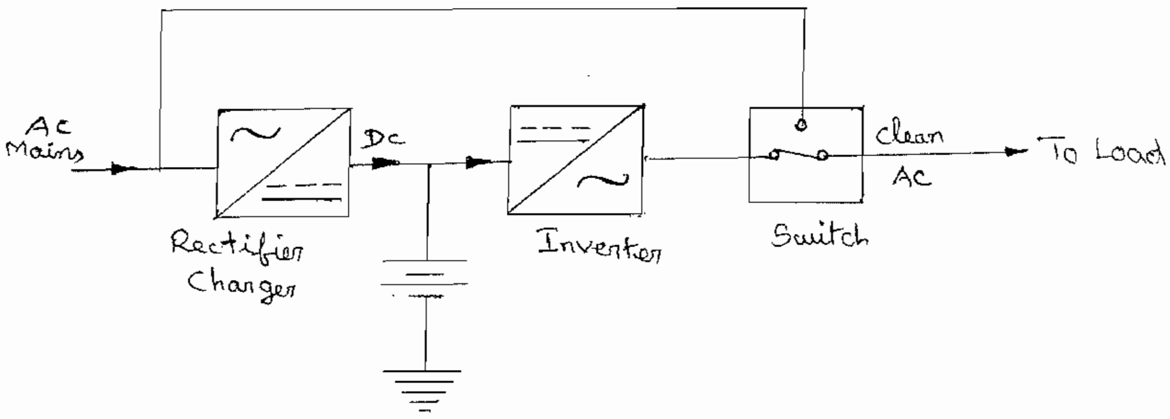

Fig. 6.7.

The function of a UPS is to ensure absolute continuity of power to the computerised control systems thereby protecting critical equipment from electrical supply failure. A UPS market is possible to provided a clean reliable supply of alternating current free of sags or surges i nthe line voltage, frequency variation, spikes and transients. UPS system achieve this by rectifying the standard main supply, using the direct current to charges the standby battery and to produce clean alternating current by passing through an inverter and filter system.

Components of a UPS system

The essential components of a UPS system are as under

1. A rectifier and thyristor - controlled battery charger which converts the AC input into regulated DC output and keeps the standby battery fully charged.

2. A standby battery which provides DC input power to inverter during voltage drops or on failure of the normal mains AC supply

3. An inverter which converts DC to clean AC thus providing precisely regulated output voltage and frequency to the load.

Questions

Part - A

I. Choose the Correct Answer

1) In case of primary Cell,

   a) Chemical energy is converted into mechanical energy

   b) Chemical energy into electrical energy

   c) Electrical energy into chemical energy

   d) Electrical energy into electrical energy.

2) The local action is minimised by amalgamating the

   a) Zinc rod b) Corbon on copper rod c) Container d) Terminal.

3) The positive electrode of dry cell is made of

   a) Copper b) Carbon c) Zinc d) Sulpherc

4) .... has 1.5 volt E.M.F.

   a) Voltaic Cell b) Daminal Cell c) Dry Cell d) None of these

5) Primary cell is generally used for

   a) Watch b) aeroplane c) Train d) automobiles.

6) The chemical term of solphric acid is

   a) H_2O b) H_2So_4 c) So_4 d) Pb

7) The possitive plate of lead Acid cell is

   a) Nickel b) Iron c) Lead d) Zinc.

Part - B

II. Answer the following questions in one word

1) What is the polarity of carbon plate?
2) Which plate has negative polarity?
3) What are the defect of the voltaic cell?
4) How the local action defect is removed?
5) What is the emf of voltaic Cell?
6) Is it necessary to use saparators in lead acid cell?
7) What is the active meterial of negative plate in lead acid cell?

Part - C

III. Answer the following questions in briefly

1) What is battery?
2) What are the characterstics of Primary Cell?
3) What are the characteristics of Secondary Cell?
4) What is local action?
5) What is polarisation?
6) What are defects occures in secondary cell?

Part - D

IV. Answer the following questions in one page level

1) Distinguished between primary and secondary Cell?
2) Explain Dry cell with neat sketch?
3) Explain watch cell?
4) What is meant by cell and explain?

Part - E

V. Answer the following questions in two page level

1) Explain the simple voltaic cell with neat sketch?
2) Explain the working principles of lead Acid cell?
3) Explain the working principle of Alkaline cell?

7. A.C.CIRCUITS AND ELECTRICAL MEASURING INSTRUMENTS

A.C.CIRCUITS

7.0. ALTERNATING CURRENT

Alternating current may be generated by rotating a coil in a magnetic field or by rotating a magnetic field within a stationary coil. Alternating current flows in one direction one time and later its changes its direction of flows. And the magnitude changes at every time. The magnitude depends upon the position of the coil.

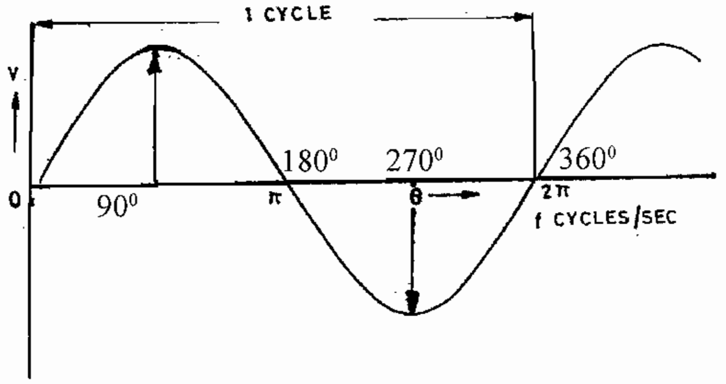

Fig. 7.0

In the figure An Alternating current shows the changing the direction of current and magnitude.

ADVANTAGE AND DISADVANTAGE OF AC CURRENT

Advantage

1) It is easy to conduct AC to one place to another place.

2) In AC current easy to develop high voltage.

3) AC equipment is low cost.

4) Possible to convert to DC.

5) Easy to step down of setup the voltage by transformer.

6) AC motors are cheapest.

Disadvantage

1) Can not able to store in Battery.

2) Compared to DC high Electric shock. So AC circuit should have good Insulation and earthing.

3) Because of high starting current in AC the voltage Drop is occurred.

4) The speed of the AC motors is depending up on the frequency.

5) According to the Induction load: Power factor gets low.

7.1. AC WAVE FORM AND ITS CHARACTERISTICS

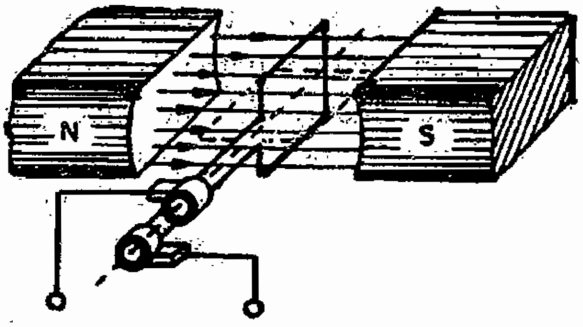

Fig. 7.1. (1)

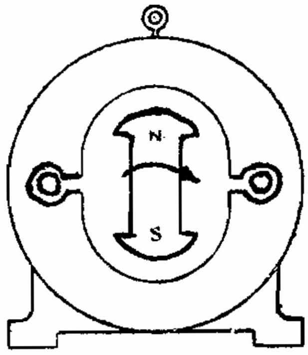

Fig. 7.1. (2)

In the figure (1) A coil fixed as to rotate in magnetic field.

In the figure (2) A magnetic field fixed as to rotate in side the coil.

If coil rotate in magnetic field or magnetic field rotate inside the coil there is an alternating emf generate in the coil. The generated alternating emf is proportional to the number of turns of coil, magnetic field strength, and the angle between the coil and magnetic field.

(i.e.) $e = Blv \sin\theta$

From this

l	=	Length of the conductor
v	=	Velocity of conductor.
B	=	Flux density.
θ	=	angle between field to conductor.
e	=	generated AC emf.

The generated AC emf value is depending upon the sine value of the angle between the magnetic field and conductor.

The sine wave may be drawn by taking the electro motive force in Y axis and time in X axis.

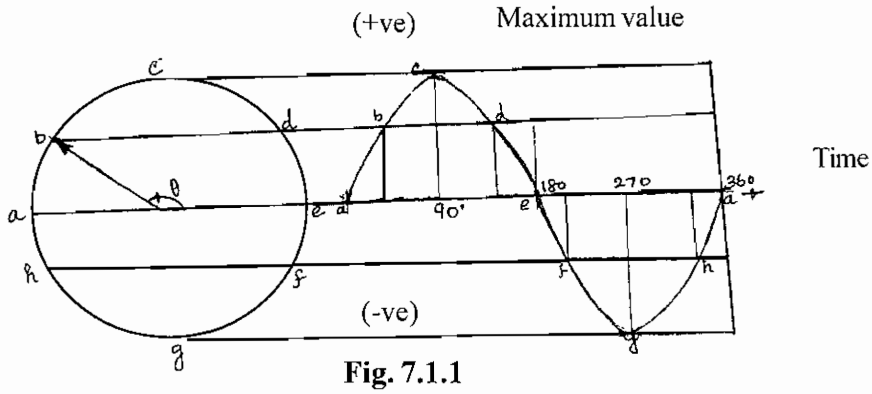

Fig. 7.1.1

In the figure A coil rotate in a magnetic field clock wise direction. First the conductor is in the position "a". Now the angle between the magnetic field and conductor is 0^{0}. Then the emf in the conductor is zero. Sin $\theta = 0$, is. The total emf is zero because in the formula Blv sin θ, the sin θ in zero.

The conductor moves by rotation to the position C the angle between the magnetic field and conductor is 90^{0}. Therefore sin $90^{0} = 1$. So, in the position the emf is maximum level. This emf is called as positive maximum.

The conductor moves by rotation to the position "e". The angle between the magnetic field and conductor is zero. In this position emf is zero. Latter the conductor moves by rotation to the position "g" the angle between the magnetic field and conduct is 90^{0}. Therefore the emf generated in the position is maximum. In that position the emf is called as negative maximum. Latter the conductor again moves to the position A. In the position the emf in the conductor is zero.

By the way the conductor rotates one revolution in the magnetic field. This rotation charted equally and the sine wave is drawn. This way alternative current sine wave form.

7.2. CYCLE

In Alternating current complete set of one positive half cycle and one negative half cycle is called one cycle.

7.2.1. Time period

The time taken by an alternating quantity to complete one cycle is called time period. It is donated by the letter "T".

Example: In the AC frequency 50 L/S the time period for one cycle is 1/50 second.

7.2.2. Frequency

The number of cycle per second is called the frequency of the alternating quantity.

Its unit is hertz (Hz) to find frequency the formula.

$f = PN/120$ is used.

f = frequency.

P = Number of pole

N = Number of revolutions is r.p.m.

7.2.3. Instantaneous value

The Alternating quantity changes at every time. In particular time its value is called instantaneous value.

7.2.4. Maximum value

The maximum value positive or negative, of an alternating quantity is known as its maximum value.

7.2.5. Effective value and R.M.S. value

The Effective value of an alternating current is given by that DC current which when flowing through a given circuit for a given time produces the same heat as produced by the alternating current when flowing through the same circuit for the same time. It is also called as Root mean square value. the current effective value denoted as I rms and voltage effective value denoted as V rms. The voltmeter and ammeters are read the effective value only.

R.M.S. Value = $\frac{I_M}{\sqrt{2}}$ or $\frac{E_M}{\sqrt{2}}$

7.2.6. Average value

The Average value is calculated by the Averages of the maximum value of alternating quantity at different instances.

Average Value = $\frac{2I_M}{\Pi}$ or $\frac{2E_M}{\Pi}$

7.2.7. Form factor

It is the ratio of R.M.S. value of AC quantity to average value.

$$\text{Form factor} = \frac{\text{R.M.S. value}}{\text{Average value.}} = 1.11$$

7.2.8. Peak factor

It is the ratio of maximum value of AC quantity to R.M.S. value

$$\text{Peak factor} = \frac{\text{Maximum value}}{\text{R.M.S. value.}} = 1.414$$

In sine wave peak factor value is 1.414.

7.2.9. Power factor

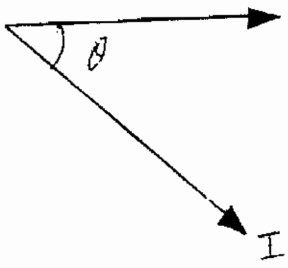

Fig. 7.2.9.

In a electric circuit the ratio between true power to imaginary power.

Power factor is always below one power factor is called as Cos θ. θ means the angle between the voltage and Ammeter.

The power factor depends upon the circuit. Example in a AC circuit if resistance only connected the power factor is unity. If Inductance or capacitor is connected in a circuit Power factor is Zero and called as zero power factor.

Example

In a AC circuit 10A current flows and emf is 230V. In the circuit power is 2 KW. Calculate power factor and phase angle between current and emf.

Current = 10A.

emf = 230V

Power = 2KW

Power factor = ?

Phase angle = ?

$$P = V1 \cos\theta$$

$$2000 = 230 \times 10 \cos\theta.$$

$$\text{Power factor } \cos\theta = \frac{2000}{230 \times 10} = 0.8695$$

$$\cos\theta = 0.8695$$

$$= \cos^{-1} 0.8695$$

$$\theta = 29^{0}59.$$

Power factor = 0.8695

Phase angle = $29^{0}59'$

7.2.10. Phase

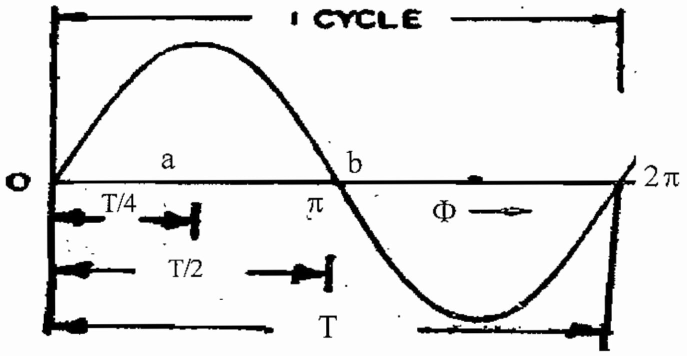

Fig. 7.2.10.

Phase of an alternating current is meant, the fraction of the time period of that alternating current, which has elapsed since the current last passed through the zero position of reference. For example the phase of current at point A is T/4 second where T is time period of expressed in terms of angle it is π/2 radians and at point B π radian.

7.2.11. Phase Difference

In the figure two conductors rotate in the magnetic field and the sine wave also drawn. If the two conductors rotate in same speed, but the conductors are in different angle. Because of the different angle the AC quantity never gets maximum of zero at the sometime. This different AC quantities between the two conductors are called phase different and the angle between is □.

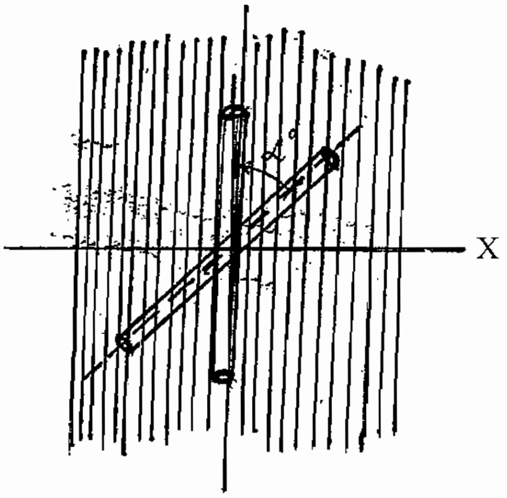

Fig. 7.2.11. (1)

In the figure, A sine wave gets the maximum first by the B sine wave. So A sine wave A is leading the sine wave B, (or) sine wave B is lagging the sine wave A.

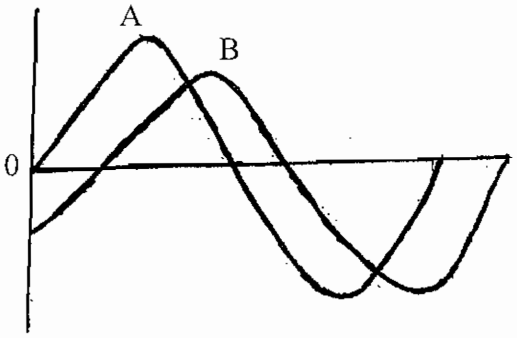

Fig. 7.2.11. (2)

7.2.12. In phase

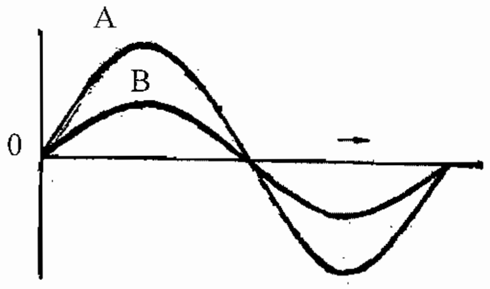

Fig.7.2.12.

If wave form of two AC quantities (voltage or current) get the maximum and zero at same time then they are said to be IN PHASE.

7.2.13. Out of phase

If in AC circuit two quantities namely voltage or current waves get the maximum and zero at different time then they are said to be OUT OF PHASE.

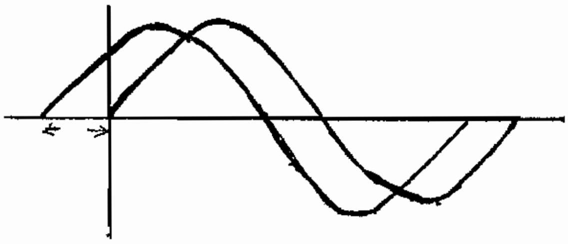

Fig. 7.2.13.

7.3. AC CIRCUIT WITH PURE RESISTANCE

A circuit without Inductance and capacitance is called pure Resistance circuit. The value of Resistance is R.

Instantaneous value of emf

$V = V_{max} \sin \omega t$

Current value = I Ampere.

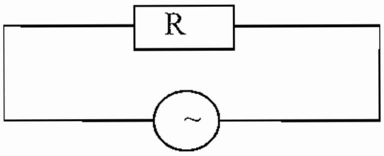

Fig. 7.3.

When current passes through the circuit there is no counter emf created. The supply voltage and Resistance only in the circuit.

$$\text{Current} = \frac{\text{Electro motive force}}{\text{Resistance}}$$

I = E/R.

further in the circuit.

Power = current x emf and power factor always unit because the angle between the current and voltage is 0^0.

Because the power factor $(\cos \theta) = 1$.

7.3.1. Inductance

A long conductor wound round in the form of a coil is called an inductor. This has the property of inducing an emf when there is a change in the current passing through it. Its unit is henry and denoted by the letter "L".

7.3.1.1. Inductance in AC circuit

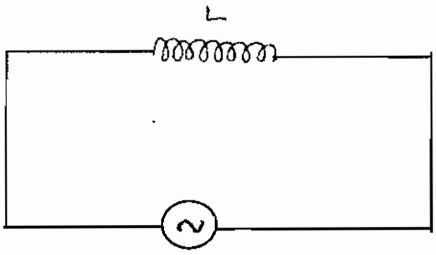

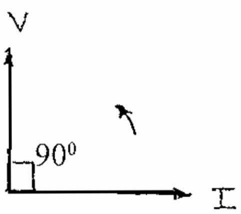

Fig. 7.3.1. (1)

In the figure a coil is connected in the AC circuit. The Alternating current quantities are changes at every time as maximum to zero and also the magnetic field changes to maximum to zero. Because of the change in magnetic field Back emf is induced in it. The Back emf resist the applied voltage. The opposition is called Inductance. By the way the Inductance is always in oppose every time in the AC circuit. In only Inductive circuit the frequency is same for voltage and current but current is lagging by 90^0 to the voltage.

7.3.2. Inductive Reactance

Inductive Reactance means the opposition due self Inductance to the AC current through a coil. Its unit is ohm and denoted by the letter "X_L".

X_L	=	Inductive reactance $X_L = 2\pi fl$
L	=	Inductance in Hentry
F	=	frequency in hertz

7.3.3. Capacitor

Two conductors plate separated by insulating material is called capacitor. The insulating material may be air, mica, and a paper.

The property of capacity to store the current in it is called capacitance. It is measured in farad. If one coulomb charge is need develop one volt potential at the capacitor terminal the capacity is one farad.

The small quantity micro farad (10^{-6}) and Pico farad (10^{-6}) are used in General Because one farad is big unit.

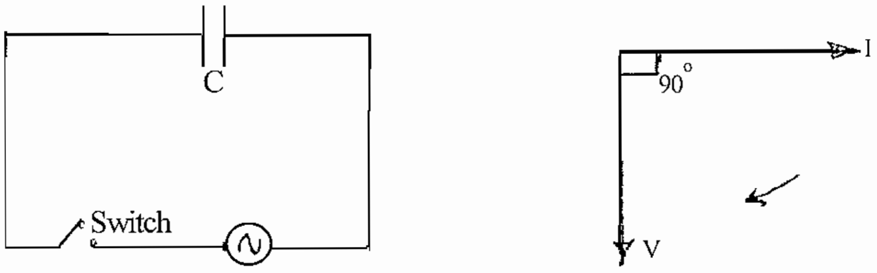

Fig. 7.3.4.

7.3.4. Ac Circuit only with the capacitor

AC voltage changes at every time. That is in the sine wave of one cycle the voltage raises to maximum at first 90^0, and from 90^0 to 180^0 the voltage decreases to zero, from 180^0 to 270^0 voltage raises in opposite direction. And 270^0 to 360^0 the voltage decreases to zero. When a capacitor connected to the circuit up to 90^0 capacitor charged and 90^0 to 180^0 the capacitor discharged. Next 180^0 to 270^0 the capacitor charged in the opposite direction from 270^0 to 360^0 the capacitor discharged from this in Ac one cycle the capacitor charged and discharged in two time. So the current passes continuously in only capacitor AC Circuit the current is leading by the voltage at 90^0

7.3.5. Capacitive Reactance

The resistance offered by a capacitor is called as capacitive Reactance. The unit is Ohm (Ω) and denoted by letter Xc

$$Xc = \frac{1}{2\pi fc}$$

Xc	=	Capacitive reactance in ohm
C	=	Capacitance – in farad
f	=	frequency – in Hertz

7.3.6. Uses of capacitor

To improve the power factor in factory to smooth the line voltage, To improve power factor is tube light, Resistance welding, Induction motor, photo equipment are same place of using capacitor.

7.4. IMPEDANCE

The combined resistance in AC circuit offered by Resistance, Inductance and capacitance (Ω) any of the two is called Impedance. The unit is ohm. It is denoted by the letter Z.

7.4.1. Resistance and Inductance is AC circuit

The Resistance and Inductance are connected in series. There is no phase different in Resistance circuit But in the Inductance circuit the voltage is lead by 90^0 to the current. The voltage across the resistance is V_R. Voltage across the Inductance is V_L Resistance value is R, Inductive Reactance value is X_L.

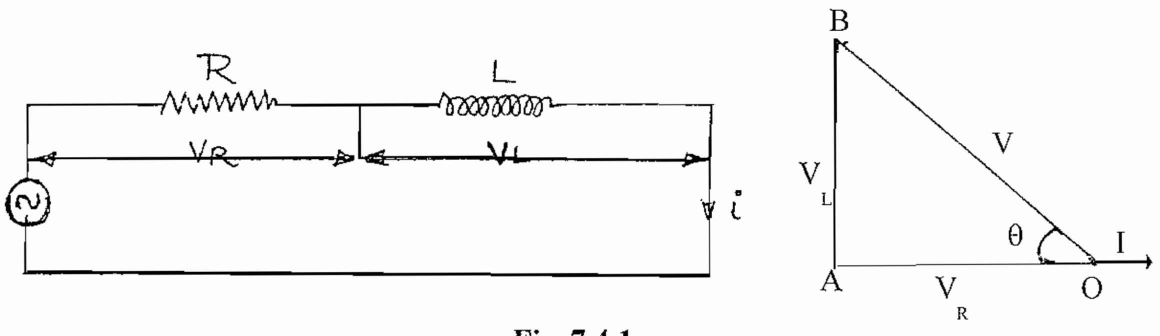

Fig. 7.4.1.

RL Circuit

RL Series Circuit - Phasor Diagram

$V = V_R + V_L$ (Vector sum)

Ohm's Law

V	=	IR,	I = Current
V_R	=	IR,	V = Voltage

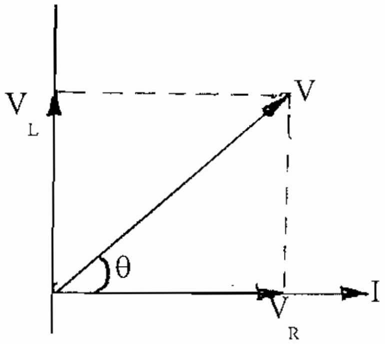

Fig. 7.4.1.

$V_L = IX_L$, R = Resistance

XL = Inductive Reactance ohm's (Ω)

$V^2 = V_R^2 + V_L^2$

$$V = \sqrt{V_R^2 + V_L^2}$$

$$V = \sqrt{(IR)^2 + (IX_L)^2}$$

$$V = \sqrt{I^2R^2 + I^2X_L^2}$$

$$V = \sqrt{I^2(R^2 + X_L^2)}$$

$$V = I\sqrt{R^2 + X_L^2}$$

$$\frac{V}{I} = \sqrt{R^2 + X_L^2} \qquad \left(\frac{V}{I} = Z\right)$$

$$Z = \sqrt{R^2 + X_L^2}$$

Z = Total Impedance, ohm's (Ω)

7.4.2. Impedance Triangle

(R.L. Series Circuit)

$$Z = \sqrt{R^2 + X_L^2} \quad \text{ohm's}$$

Power Factor $\cos\theta = \frac{R}{Z}$

Power = VI cos θ watts.

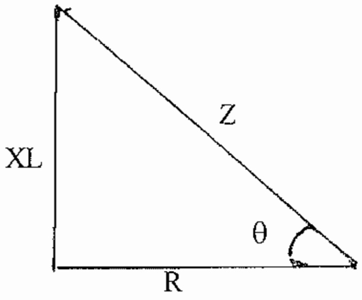

Fig. 7.4.2.

7.5. RESISTANCE AND CAPACITANCE IS AC CIRCUIT

In the figure the Resistance R and capacitor C is connected is series with the circuit. The voltage between the capacitor and Resistance are V_C and V_R. The total supply voltage is V and current is I.

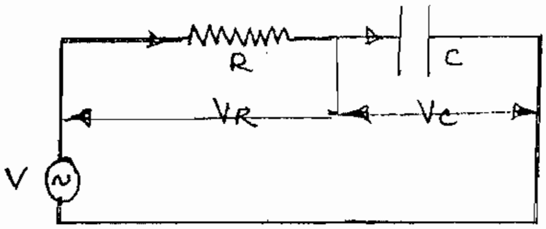

In the above figure the voltage by the resistance is mentioned in the Vector at OA as the same the in the Vector at AB. In the circuit the supply voltage is OB and is the sum of OA and AB

R-C CIRCUIT

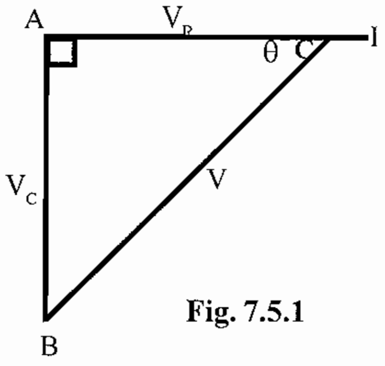

Fig. 7.5.1

7.5.1. R-C Series circuit - Phasor diagram

$V = V_R + V_c$ (Vector sum)

Ohm's Law

$V = IR$, I = Current

$V_R = IR$, V = Voltage

$V_C = IX_C$, R = Resistance

$X_C =$ Capacitive Reactance ohm's (Ω)

$V^2 = V_R^{\,2} + V_C^{\,2}$

$$V = \sqrt{V_R^{\,2} + V_C^{\,2}}$$

$$V = \sqrt{(IR)^2 + (IX_C)^2}$$

$$V = \sqrt{I^2R^2 + I^2X_C^{\,2}}$$

$$V = \sqrt{I^2\,(R^2 + X_C^{\,2})}$$

$$V = I\sqrt{R^2 + X_C^{\,2}}$$

$$\frac{V}{I} = \sqrt{R^2 + X_C^{\,2}} \qquad \left(\frac{V}{I} = Z\right)$$

$$Z = \sqrt{R^2 + X_C^{\,2}}$$

$Z = Total\ \mathrm{Im}\,pedance, ohm's\,(\Omega)$

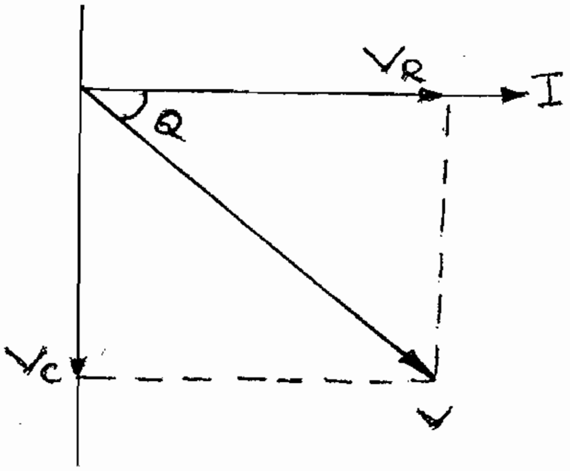

7.5.2. Impedance Triangle

(R.C. Series Circuit)

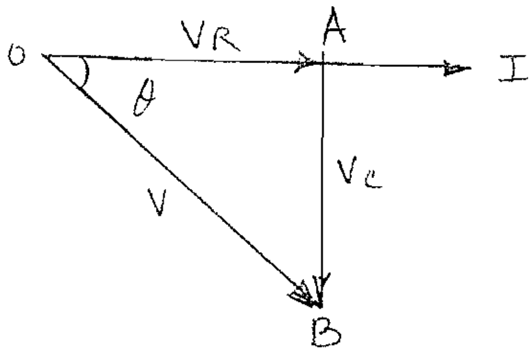

Fig. 7.5.2

$$Z = \sqrt{R_2 + X_C^2} \text{ ohm's}$$

Power Factor $\cos\theta = \frac{R}{Z}$

Power = VI cos θ watts.

7.6. RLC CIRCUIT

(Resistance - Capacitance in AC Circuit)

In the circuit the Resistance, capacitor and Inductance are connected in series in this Circuit the current is same. Voltage is differed by resistance offered by the R.L.C. Total supply voltage is V.

$I = I_R = I_L = I_C$

and $V = V_R + V_L + V_C$

The victor diagram shows the voltage vector diagram and Impedance vector diagram the above are with reference to the current.

V_R - Voltage across the resistance.

V_L - Voltage across the Inductance

V_C - Voltage across the capacitor

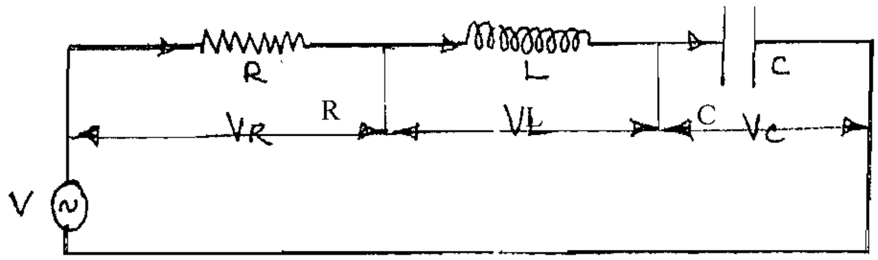

Fig. 7.6.

7.6.1. RLC Series Circuit

V_R is in phase with current I

V_L is leading with current at 90^0

V_C is lagging with current at 90^0

If V_L is greater than Vc ($V_L > V_C$) the difference between V_L and V_C can be Wright as $V_L - V_C$. Total voltage is V

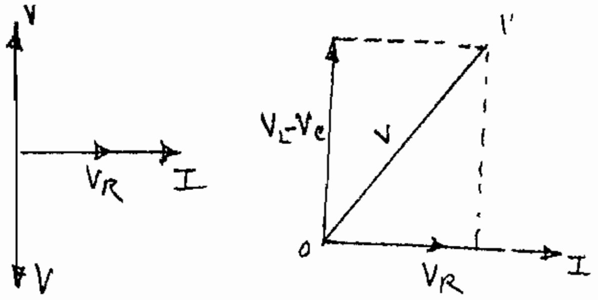

Fig. 7.6.1.

Case 1

RLC Series Circuit Phasor diagram ($X_L > X_C$)

$V = V_R + V_L + V_C$ (Vector Sum)

Ohm's Law

$V = IR$,	I = Current, R = Resistance
$V_L = IX_L$	V = Volatage
$V_C = IX_C$,	X_L = Inductive Reactance (ohm's)
	X_C = Capacitive Reactance (ohm's)

$$V^2 = V_R^2 + (V_L - V_C)^2, \quad (X_L > X_C)$$

$$V = \sqrt{V_R^2 + (V_L - V_C)^2}$$

$$V = \sqrt{(IR)^2 + (IX_L - IX_C)^2}$$

$$V = \sqrt{I^2R^2 + I^2(X_L - X_C)^2}$$

$$V = \sqrt{I^2(R^2 + (X_L - X_C)^2}$$

$$V = I\sqrt{R^2 + (X_L - X_C)^2}$$

$$\frac{V}{I} = \sqrt{R^2 + (X_L - X_C)^2} \qquad \left(\frac{V}{I} = Z\right)$$

$$Z = \sqrt{R_2 + (X_L - X_C)^2}$$

Z = Total Impedance Ohm's

7.6.2. Impedence Triangle

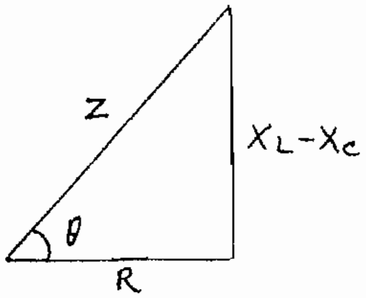

Fig. 7.6.2.

Case 1 $(X_L > X_C)$

$$Z = \sqrt{R^2 + (X_L - X_C)^2}$$

Power factor $\cos\theta = \frac{R}{Z}$

Power = VI Cos θ watts

7.6.3. Case 2

RLC Series Circuit Phasor diagram $(X_L < X_C)$

$V = V_R + V_L + V_C$ (Vector Sum)

Ohm's Law

$V = IR$, I = Current, R = Resistance

$V_L = IX_L$ V = Volatage

$V_C = IX_C$, X_L = Inductive Reactance (ohm's)

X_C = Capacitive Reactance (ohm's)

$$V^2 = V_R^2 + (V_C - V_L)^2, \ (X_L < X_C)$$

$$V = \sqrt{V_R^2 + (V_C - V_L)^2}$$

$$V = \sqrt{(IR)^2 + (IX_C - IX_L)^2}$$

$$V = \sqrt{I^2R^2 + I^2(X_C - X_L)^2}$$

$$V = \sqrt{I^2(R^2 + (X_C - X_L)^2}$$

$$V = I\sqrt{R^2 + (X_C - X_L)^2}$$

$$\frac{V}{I} = \sqrt{R^2 + (X_C - X_L)^2}$$

$$Z = \sqrt{R_2 + (X_L - X_C)^2}, \qquad \frac{V}{I} = Z$$

Z = Total Impedance Ohm's

7.6. 4. Impedence Triangle

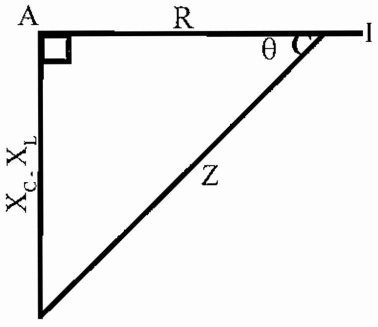

Fig. 7.6.4.

Case II

$(X_L < X_C)$

$Z \quad = \sqrt{R^2 + (X_C - X_L)^2}$

Power factor $\cos\theta = \frac{R}{Z}$

Power = VI Cos θ watts

7.7. SERIES RESOANCE

In resistance, Inductance and capacitor are in series circuit the impedance

$Z = \sqrt{R^2 + (X_L - X_C)^2}$

Total Reactance X_L-X_C This Reactance may be capacitive Reactance or Inductive reactance by which one is greater value.

Since inductive reactance $X_L = 2\pi fL$, Inductive Reactance X_L is directly proportional to the frequency. So X_L increases when the frequency increases.

On the other hand Capacitive reactance $X_C = 1/2\pi fc$. As X_C is inversely proportional to the frequency, X_C decreases with increase in frequency. So the circuit having both L and C, X_L increases from 0, X_C decreases from maximum value as frequency increases.

At a particular frequency both reactances (X_L & X_C) will be equal and opposite. This condition is called Resonance and this circuit is called Resonance circuit and that particular frequency is called Resonance frequency. $f = \frac{1}{2\pi\sqrt{LC}}$

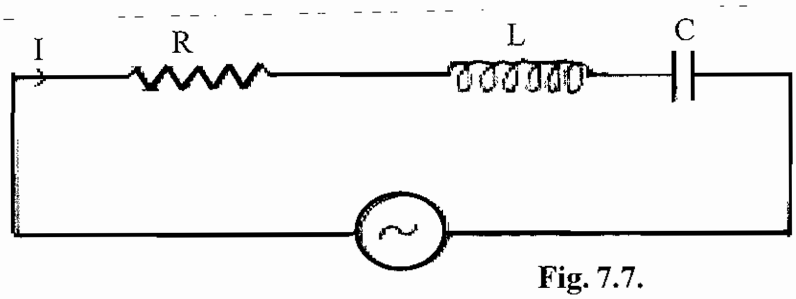

Fig. 7.7.

7.7.1. Properties

1. At resonance, X_L & X_C nullify each other
2. Impedance of resonance circuit is very low.
3. Current through this circuit depends upon the resistance only. So current will be maximum at this condition. ie, If current at resonance is I_m then $I_m = V / R$

4. Power factor of the circuit is unity as the circuit is purely resistive.
5. As the circuit is purely resistive, both voltage and current are in phase.
6. Voltage drop across inductance and capacitance is maximum.
7. Frequency at which resonance occurs in a circuit is called resonance frequency.

7.7.2. Applications of resonance circuit

1. It is used in radios to tune for a particular radio station
2. Used in TV receiver.
3. Used in oscillators as tank circuit.
4. Used in microwave communication equipment
5. Used in Telex and Tele printer.
6. Used in IF and RF transformers.
7. Used in Navy ships.

7.7.3. Q Factor of a Series Resonance Circuit

At resonance condition voltage drop across inductance and capacitance are equal. Further, this voltage is more than the supply voltage. The ratio between this magnified voltage and supply voltage is called Q factor.

7.8. Parallel Resonance

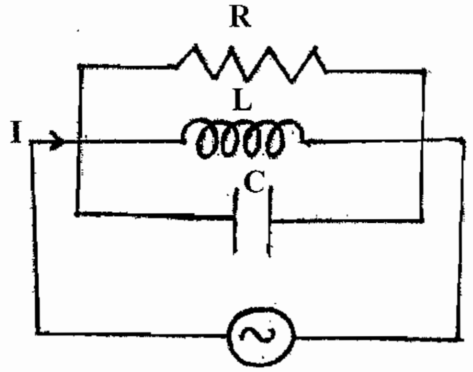

Fig. 7.8.

When the frequency of a circuit (which contains resistance, inductance and capacitance in parallel) is increased, both inductive reactance and capacitive reactance will nullify each other. A circuit at this condition is called parallel resonance.

7.8.1. Properties of Parallel Resonance

1. Impedance of the circuit is maximum.
2. Current at resonance is minimum.

i.e. $I = \frac{V}{L/CR}$

3. Current magnification takes place.
4. Voltage and current is in phase.
5. Power factor of the circuit is unity.

7.9. POLYPHASE SYSTEMS

If the armature of an alternator generating a.c. supply is having only one winding then the supply taken across the two terminal will be one phase. It will have only one voltage waveform. So it is called single phase.

Instead of one winding if the alternator has 2 or 3 winding then 2 or 3 phases are generated. So a system which produces more than one phase is called polyphase.

If the armature of an alternator is having three windings namely A_1A_2, B_1B_2 and C_1C_2 which are displaced 120? apart is rotated, then three different emf is generated in these windings. The phase difference between each phase will be 120?. Generally three phase is denoted as red (R), yellow(Y) and blue(B).

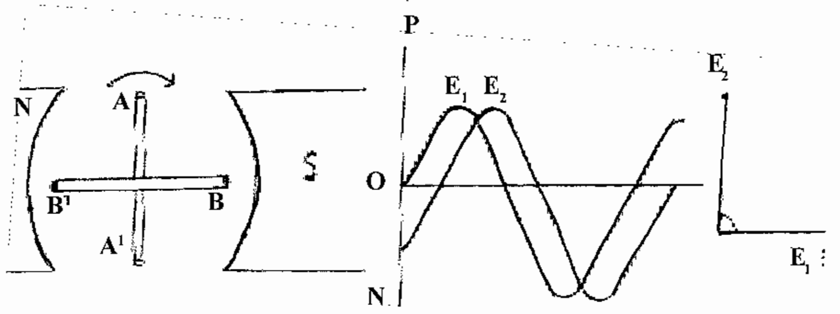

(a) (b)

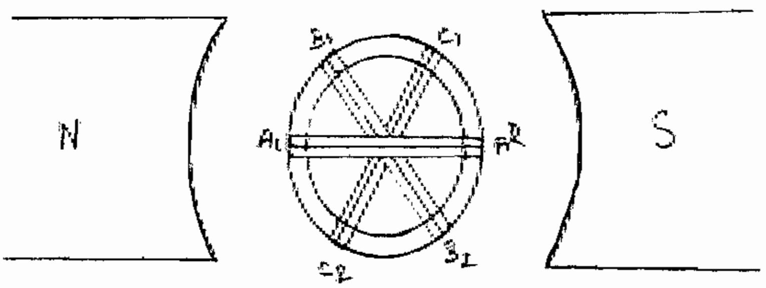

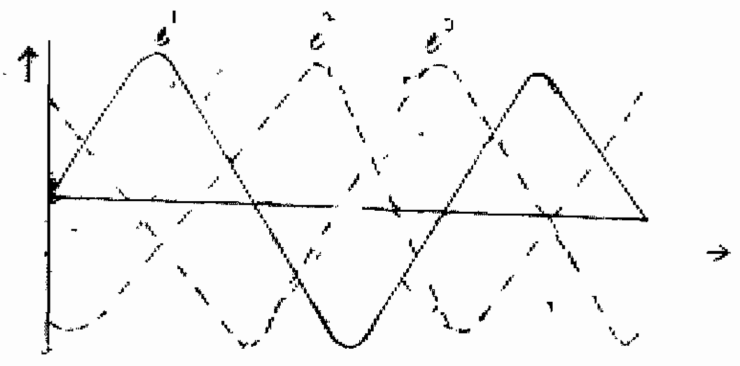

Fig. 7.9.

7.9.1. Phase Sequence

It is the term which is used to represent in what sequence the three phase voltage or current attains maximum value. For eg. If the phase sequence is said to be RYB, then first red phase attains maximum value and then with a phase difference of 120° each, the yellow phase and blue phase attains their peak value.

7.9.2. Advantages of Three Phase System

1. Power produced by three phase motor is high compared with that of same rating of single phase motor.
2. Three phase transmission is more efficient and requires less copper for transmitting same power over the same distance.
3. Three phase motors are self starting while single phase motors are not.
4. Power factor of three phase motor is high.
5. Torque of three phase motor is uniform where as that of single phase motor is pulsating.
6. Size of three phase motor is smaller than single phase motor of same rating.

7.9.3. Balanced Load

If all the phase windings of three phase alternator are having equal impedance or phase angle, then it is called balanced system. Similarly if each phase load of the three phase load connected to three phase supply is having equal impedance or phase angle then it is called balanced load.

7.9.4. Unbalanced Load

If three phase load having different value of load in each phase is connected to three phase supply, then it is called unbalanced load

7.10. THREE PHASE CONNECTION

Each winding of a 3 phase generator will have two ends and so totally there will be six ends. These ends can be connected in any one of two fashion namely

1. Star or Y Connection
2. Delta or Mesh Connection

7.10.1. Star or Y Connection

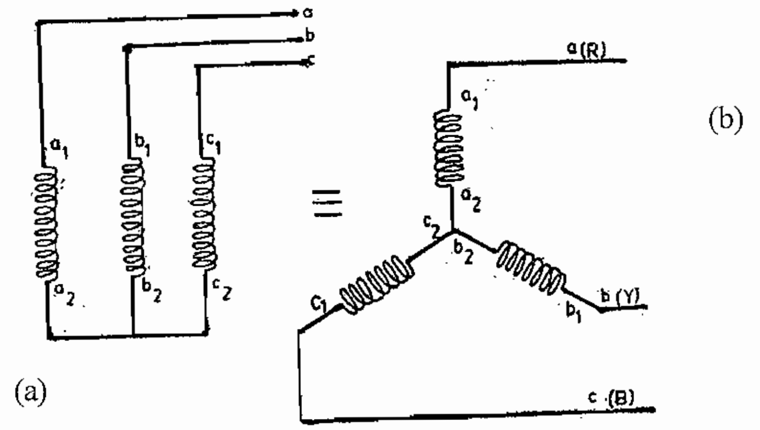

Fig.7.10.1.

In this method similar ends (starting end or finishing end) of each phase winding are joined to.gether to form a common junction N and supply is taken from other three ends. The junction N is called star point or neutral point. The voltage between any one line and neutral is called phase voltage. Current flows through that phase is called phase current. Voltage between any two lines is called line voltage and current through that line is called line current.

In the star connection, phase current = Line current

$$\text{i.e. } I_{ph} = I_L$$

$$\text{Phase voltage} = \frac{\text{Line voltage}}{\sqrt{3}}$$

7.10.2. Delta or Mess Connection

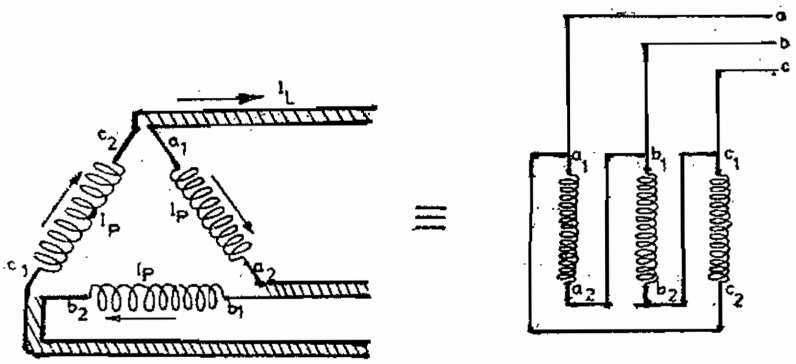

Fig.7.10.2.

If the six ends of three phases are so connected that one end of first coil is connected to start end of the second coil and so on, a closed mesh will be formed. If three lines are taken from the three connected points, then this method is called delta connection.

As only one phase winding is in between any two lines, phase voltage will be equal to the line voltage.

Phase Voltage = Line Voltage

Phase Current = Line Current/$\sqrt{3}$

Therefore, 3 phase power = $\sqrt{3}$ VI cosθ

7.11. TWO WATT METER METHOD OF MEASURING POWER AND POWER FACTOR

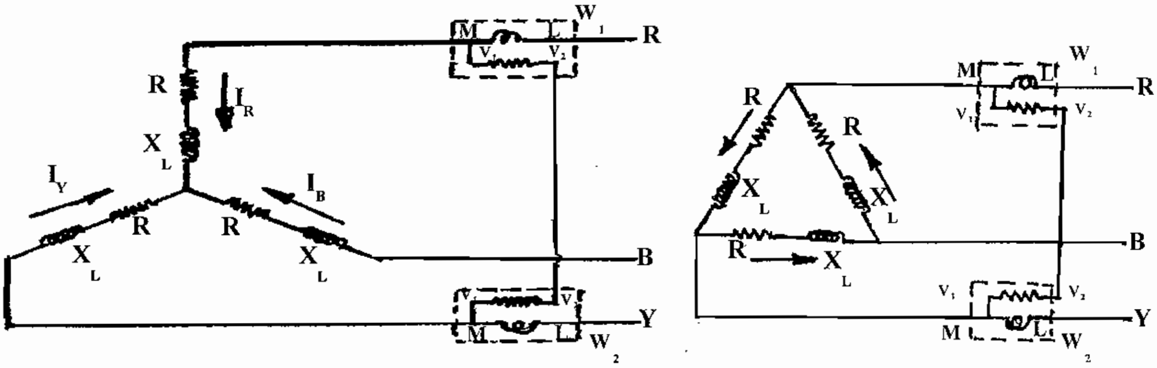

Fig. 7.11.

The one wattmeter, two wattmeter and three wattmeter method are used to measure the power of three phase.

In common two wattmeter method is used. If the load is balanced or imbalance this method may be used. The circuit diagram shows the Two wattmeter connected is star connected three phase load.

In this method the wattmeter W1 and W2 are separately connected to three phase circuit. In wattmeter there are two coils one is current coil and another one is pressure coil in the figure. M, L is represent the current coil and V1, V2 is represent the pressure coil. The current coil of Wattmeter W1 is connected in series with R and the pressure coil is connected between R and B as the same the current coil of W2 is connected in series with Y and the pressure coil is connected between Y and B.

Similarly, two wattmeters may be connected to Delta connection to measure the total power. This connection is shown in the figure.

ELECTRICAL MEASURING INSTRUMENTS

7.12. INTRODUCTION

In Electrical terms current, voltage, power, resistance, conductance and capacitance are those which gives the value of quantity to be measured by the instruments is called Electrical measuring instruments. We study about some of the electrical measuring instrument.

Ammeter, Voltmeter, Wattmeter etc.

7.12.1. Classification of Electrical measuring instruments

Electrical measuring instruments are classified into two types.

1. Absolute Instruments.
2. Secondary Instruments.

Absolute instruments are those which give the value of the quantity to be measured in terms of the constants of the instrument and their deflection only. No previous calibration of comparison is necessary in their case. The example of such an Instrument is used in Laboratory as standard Instruments.

Secondary Instruments are those in which the value of electrical quantity to be measured can be determined from the deflection of the Instruments only. When they have been pre-calibrated by comparision with an absolute Instrument. The secondary Instruments, which are generally used in electrical field.

The example of secondary Instruments is voltmeter, Ammeter, Energy meter and so on.

7.12.2. Classification of secondary Instruments

Secondary instruments are classified into three types namely

1. Indicating instrument
2. Recording instrument
3. Integrating instrument

1. Indicating instrument

They give a reading of the input quantity during the specified interval of time or give a measure of the input quantity given at the moment of measurement. A dial and pointer are used in such instruments.

Example: Ammeter, Voltmeter, Wattmeter, Power factor meter.

2. Recording instrument

They give a continuous record of the quantity being measured over a specified period. In these instruments a pen is attached to the moving system will trace the values of an a graph sheet placed over a slowly rotating drum.

3. Integrating Instruments

They totalize events over a specified period of time, the product of time and electrical quantity. This instrument generally given by a register consisting of a set of pointers and dials.

Example: Ampere hour meter, Watt hour meter.

7.13. PRINCIPLE OF OPERATION

Ammeter, voltmeter, power and energy are measured by the following effect.

(1) Electro magnetic effect

(2) Magnetic effect.

(3) Heating effect.

(4) Chemical effect.

(5) Electro dynamic effect.

(6) Electro static effect.

1. Electro magnetic effect.

Ammeter, voltmeter, wattmeter and watt hour meter function by this effect. This type of Instruments is also called as Induction meters.

2. Magnetic effect.

Generaly Ammeter and voltmeters function in this effect.

3. Thermal effect.

Ammeter and voltmeter function in this effect this type of meters is called also Hot wire instruments.

4. Chemical effect.

The DC ampere – hour – meter only functions in this effect.

5. Electro dynamic effect.

Ammeter, voltmeter, and watt meter, functions in these effects. This type of meters is also called as Dynamometer type Instruments.

6. Electro static effect

Electro Static effect voltmeter function in this effect.

7.14. AMMETER AND VOLTMETERS

Working principle

The ammeter and voltmeter work in the same principle in the ammeter the load current or a part of the load current pass through it and current through the meter gives the deflecting torque. As the same in the voltmeter the current is proportional to the measurable voltage is passes through the meter and gives the deflecting torque. All type of voltmeter is measures like the same except the electrostatic voltmeter. The main different between the two meters is the current, which gives the deflecting torque.

1. Ammeter

Ammeter is used to measure the current the flows through a circuit. It measures current in Ampere. Ammeter is connected to the circuits in series. So the Ammeter coil is thick in size and has few number of turns to reduce the voltage drop across the meter coil. When the Ammeter is connected in series with the load, full load current passes through the ammeter coil. As the full load current is high in magnetude the coul may burn. Therefoer a low resistance called as shunt is connected parallel to the meter coil which allows maximum current to pass through it and very less current only passes through the meter coil.

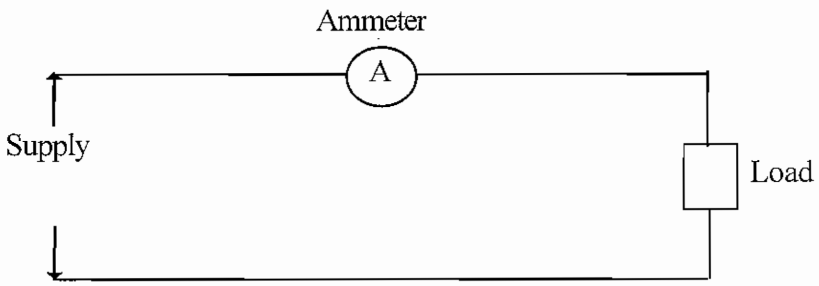

Fig. 7.14 (1)

2. Volt Meter

Voltmeter is used to measure the voltage across two different points in a circuit. The full Voltage is applied across the meter. The resistance of the voltmeter coil must be high to avoid short circuit. So the voltmeter coil is thin and has many number of turns. The voltmeter should be connected across the circuits.

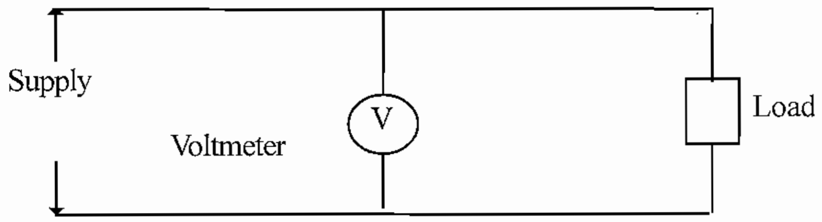

Fig. 7.14 (2)

7.14.1. Type of ammeter and voltmeter.

The common used ammeter and voltmeters are.

(1) Moving coil type.

(2) Moving Iron type.

(3) Hot wire type.

(4) Electro static type.

(5) Induction Type.

1. Moving coil type meters

Moving coil type meters are two types. They are,

(1) Permanent magnet type.

(2) Dynamo meter type.

The two types instruments function as Ammeter and voltmeter. The permanent magnet meter is used to measure Direct current and Dynamometer type meter is used to measure the Alternating and Direct current.

2.Moving Iron type meters

Moving Iron type meters are two types. They are,

(1) Attraction type.

(2) Repulsion type.

They measure the Both Alternating and Direct Current. They are very low cost and this type of meters is mostly used.

The Heating effect is used to function the Hot wire Instruments. So this type of meter measure the Effective value. This type of meter is suitable to measure the Alternating current. Frequency never disturbs the measurement and never disturbed by the stray magnetic field.

Electro static meters are only used as voltmeter. Very low power is need to operate the meter.

Induction type meters are only used in Alternating current. They are not used as voltmeter and am meter because they are very costly.

7.14.3. Common errors

The accuracy of the measuring Instruments is reduced by common errors. They are.

1. Frictional error.
2. Error due to change is temperature.
3. Mechanical unbalance.
4. Change in characteristics.

The temperature due to the current through the coil and room temperature changes the resistance of the coil. Due to the change error is occured. If the current through the voltmeter is very low the temperature changes increases the error. So reduce the error the coils are fixed in ventilated place.

To get required resistance low temperature coefficient materials are used and connect in series.

Friction error is due to the pressure in the pivot. To reduce the error the moving parts are very light in weight and spindle is fixed in vertical.

7.15. MOVING COIL INSTRUMENTS:

They are two types

1. Permanent magnet type.
2. Dynamo meter type.

7.15.1. Moving coil permanent magnet type

Ammeter and Voltmeter

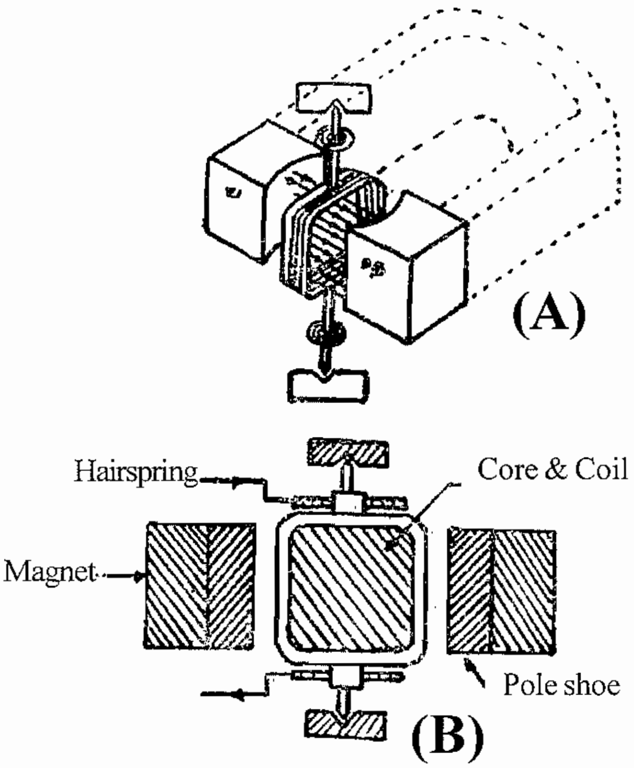

Fig. 7.15.1.

This type of Instruments function by the principle. When a current carrying conductor is placed in a magnetic field, there is a force is induced in the conductor. This force moves the conductor any direction and replace from magnetic field.

The construction is as shown in the figure. The soft Iron magnetic piece is fixed in the end of the "U" shaped permanent magnet. A cylinder shaped Iron core is fixed between the magnetic poles. A rectangular coil wounded on the aluminium or copper frame is fixed in the air gap.

Two spiral shaped phosphor Bronze hairsprings are fixed. On the top, and bottom of the coil. They are used to carry the coil current and give the controlling torque to the coil

The aluminium frame not only provides support for the coil but also provides damping by eddy current induced in it. This construction may be used in voltmeter and Ammeter. When is used as Ammeter the circuit current or the part of circuit current is pass through the coil. When it is used as voltmeter the current through the coil is proportional rate of circuit voltage. The magnetic field by coil current is repulled by the permanent magnet's magnetic field and the Deflecting torque is induced in the coil. This Deflecting torque is proportional to the coil current so the scale is uniform division Deflecting Direction is according to the coil current direction.

Moving coil types are able to carry only low range of current. Shunt and series resistance are connected with it and used as Ammeter and voltmeter.

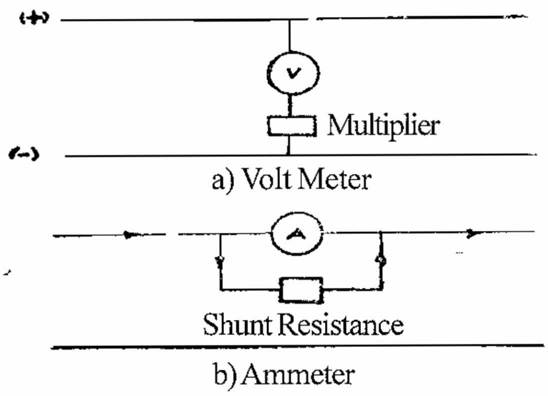

Fig. 7.15.1.

7.15.2. Advantages

1. Scales are uniform.
2. No hysteresis loss.
3. Low power loss.
4. High torque weight ratio.
5. High eddy current damping.
6. Not affected by stray magnetic field.
7. Range should be extending by shunt and multipliers.

7.15.3. Disadvantage

1. Deflecting torque is due to current direction. So this type of meter used only in DC.
2. Compared to moving iron this type of meter are costly.
3. With the common error (friction and temperature) the aging error due to the their spring and permanent magnet is occurred.

7.16. DYNAMO METER TYPE MOVING COIL INSTRUMENTS

The construction of this type of meters are as same like the permanent magnet meter but Instead of permanent magnet there are two fixed coils fixed as shown in the figure. The coils are air cores because to avoid the hysteresis effect when the meter is operated in alternating current. This type of meter may be used as Ammeter or voltmeter. Mostly this type of meter used as voltmeter.

Fixed coils and moving coils are connected in series of parallel of it necessity.

Two Hairsprings are used to Induced controlling torque and also carry the current to the moving coil. Air damping is used to damping torque. Some time eddy current damping are used.

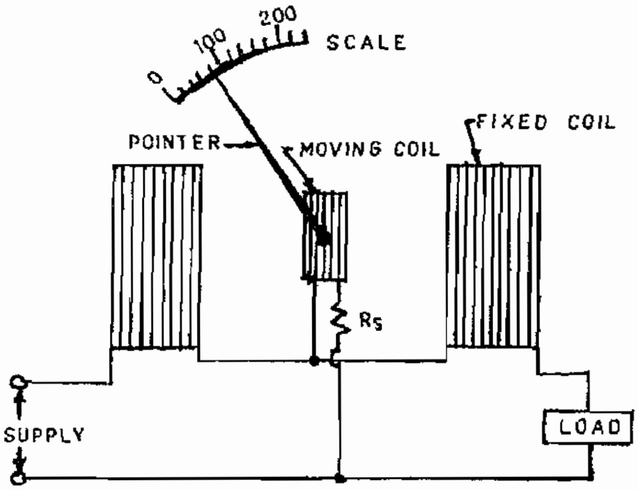

Fig. 7.16.

When the meter used as Ammeter the load current or the part of the load current passes through the coil,. When the meter used as voltmeter the current proportional to the voltage is posses through the coil. The current induces the Deflecting torque.

This deflecting torque is proportional to the square of the current passes through it. So this type of meters are used in alternating and direct current. The scales are not uniform if the meter is used as ammeter or voltmeter particularly crowded nears zero.

Because of the air core the field strength is very low. More coil turns is necessary to induce for particular deflecting torque. And so for the hairspring is very thin the very small amount of current can be send through the coil. So more turns of coil are necessary. The above two factors the weight of the moving part is increased and the friction increased compared to other meter. The sensitivity is very low due to torque / weight ratio.

This type of meters is very costly. There in no eddy current and hysteresis error upto 10 A Ammeter and 600 V Voltmeter are manufacture with high sensitivity.

7.17. MOVING IRON INSTRUMENTS

The are two type

1. Attraction type
2. Repulsion type

7.17.1. Attraction type

This type of instruments is operated in the principle of Iron piece in attracted by a magnet. As shown in the figure when current passes through a coil a magnetic field is induced. An oval shaped soft iron piece is fixed in a spindle, which is fixed in between two bearings near the coil. As a pointer is fixed in the spindle when the soft iron moves towards the magnetic field the pointer moves on the scale. The deflection of the pointer depends upon the coil current. Though the current is in any direction in the coil the iron moves only towards the magnetic field. So this type of instrument is used both in AC and DC.

This figure shows the air friction damping and gravity control is used in this type.

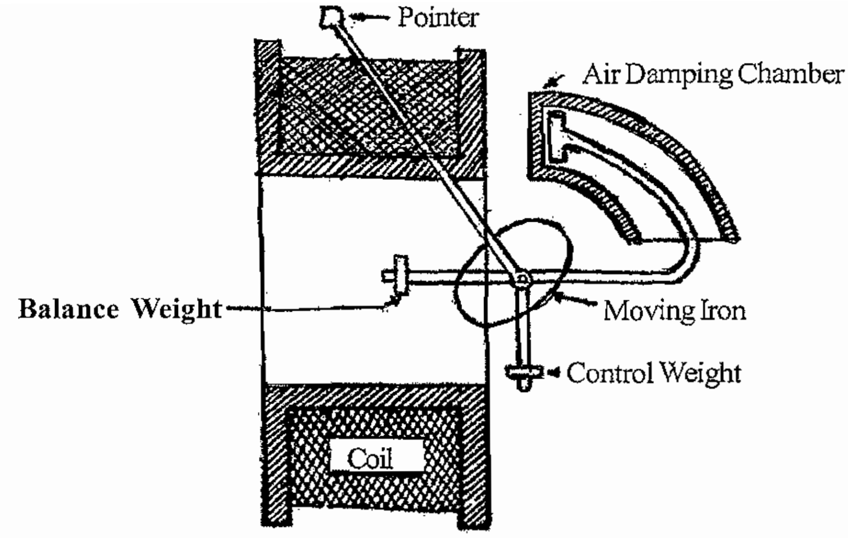

Fig. 7.17.2.

7.17.2. Repulsion Type

The construction of the instrument is shown in the figure. Two soft iron pieces are fixed in parallel in centre of the coil. In it one piece is fixed and the other is movable. This movable piece is fixed with the spindle.

When this instrument is used as an Ammeter, these iron pieces are magnetised with same pole effect by the load current passes through the coil.

When this instrument is used as a voltmeter these iron pieces are magnetised with same pole effect by the current proportional to the circuit voltage.

These iron pieces are magnetised as the pole on the top and south pole the bottom. Due to the same pole effect, as by the repulsion principle the moving iron is repulled by the fixed iron. This depletion depends upon the coil current.

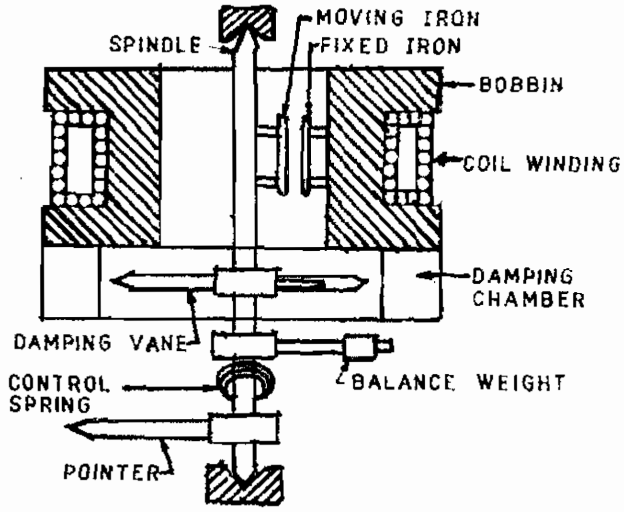

Fig.7.17.2.

As the moving iron is fixed with the spindle, the pointer moves on the scale when the spindle moves. Though the current is in any direction the iron pieces are magnetised with same pole effect. So the spindle rotates regularly in one direction. So, this instrument is used in both AC and DC.

If plates are used instead of iron piece, the measurements are accurate. This figure shows that damping torque is got from air friction damping. The controlling torque is got from gravity control.

7.17.3. Errors in moving Iron Instruments

Generally two types of errors occur in this type of instrument.

1. Errors due to direct current and Alternative current.
2. Error only due to AC.

1. Error occurs due to AC / DC

(i) Due to Hysteresis lose in the moving iron the measurements differ. To avoid this hysteresis loses, the low hysteresis loss metals such as Mumetal and Permallay C are used.

(ii) Due to stray magnetic field the measurements are not shown accurately. To avoid it, magnetic screening is formed using metal seal.

2. Errors due to AC only

(i) Frequency error occurs normally due to AC. As the frequency changes the impedence of the coil changes. And the amount of eddy current changes.

(ii) Due to these change errors occurs to avoid this error a capacitor equal to the coil resistance is connected with the circuit.

7.17.4. Advantages

(i) High deflecting Torque.

(ii) Used both in AC and DC

(iii) It is cheaper and reliable

(iv) It is suitable to be used in high capacity and in low frequency.

(v) As the moving parts don't need current this instrument is robust.

Disadvantages

(i) Hysteriesis lose and stray magnetic loss occurs.

(ii) The scales are not uniform

(iii) While used in AC supply.

The frequency in which it is calibrated, it works accurately.

(iv) As the heat increases, the stiffness of the hairspring reduces.

7.18. EXTENSION OF INSTRUMENTS RANGE

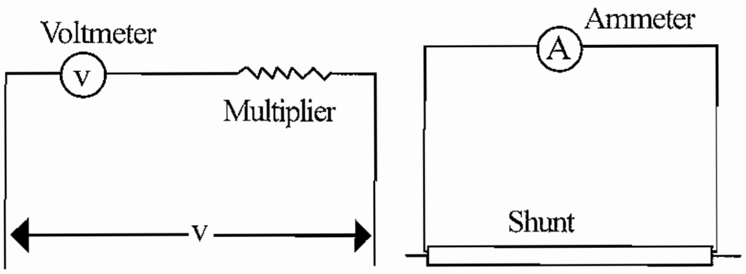

Fig.7.1.8.

The measuring range of Instrument in due to the current carrying capacity of the coil to extent the measuring range the current carrying capacity in increased.

After manufacture the Instrument it is not possible to change the coil. So to extent the measuring range shunt, multipliers, dividers, current transformers and potential transformers are connected externally. The scale of the Instruments are changed with calibrated new one when External Equipment connected for extension shunt means a low resistance metal strip. The strip is used to extent the range of ammeter and connected is parallel as shown in figure.

The shunt resistance are used extent the measuring range of Ammeter. The shunt resistance diverts most of the time current though it and above small quantity of current through the Ammeter (Vi) they are plate or tabular shaped. The temperature coefficient must very low for shunt resistance.

Multiplier used to extent the measuring the range of voltmeter. The multipliers are connected in series with the meter and it has resistance without Impedance.

The multiplier value is should be constant at any temperature change. So the multipliers temperature coefficient is must be at low.

7.19. MEASUREMENT OF RESISTANCE

The resistance are classified by Low resistance, Medium resistance and High resistance.

7.19.1. Low resistance

One ohm and below the value are called low resistance. Armature, series field resistance, Ammeter shunt, and cable length are the example of Low resistance.

So measure the low resistance the following methods are used.

1) Ammeter Voltmeter method.

2) Potentio meter method.

3) Kelvin's double bridge method.

7.19.2. Ammeter and voltmeter method

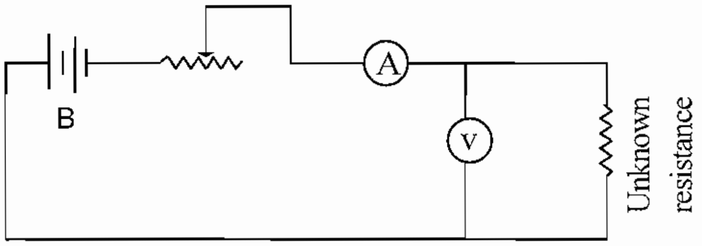

Fig. 7.19.2.

The ammeter and voltmeter are connected in series and parallel with the unknown resistance. The unknown resistance is calculated by the meter reading with use of Ohms law.

$$\text{Resistance (R)} = \frac{\text{Voltage (V)}}{\text{Ampere (I)}}$$

By changing the resistance near to the Battery and five of six voltage and current readings are taken then, ohm's law used to find the unknown resistance.

7.19.3. Potentio meter method

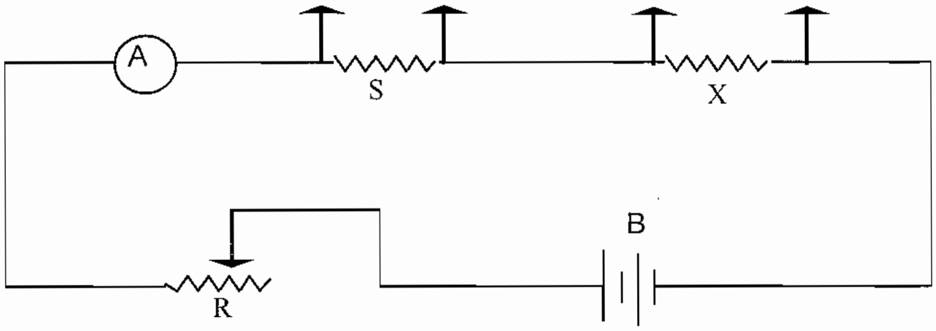

Fig . 7.19.3.

In this method a standard resistance is connected in series to the unknown resistance. The voltmeter measure the voltage across to the unknown and standard resistance.

The value of unknown resistance is calculated by the given formula.

$$\text{Ratio (1)} = \frac{\text{Unknown Resistance (X)}}{\text{Standard Resistance (S)}}$$

$$\text{Ratio (2)} = \frac{\text{Voltage across unknown Resistance (X)}}{\text{Voltage across standard Resistance (S)}}$$

$$\text{Ratio (1)} = \text{Ratio (2)}$$

7.19.4. Wheat stone Bridge method

This method is very accurate. The P, Q, R and unknown resistance X is connected as shown in the figure. The R is variable resistance. The variable supply voltage is connected to the point A and C. The Galvano meter is connected between the terminal B and D. The Galvano meter is pointed at Null point by changing the voltage and variable resistance. At null point the current through the arm A to B and C to D is equal. So the potential different between A to B is

= Current x Resistance

= I_1 x P.

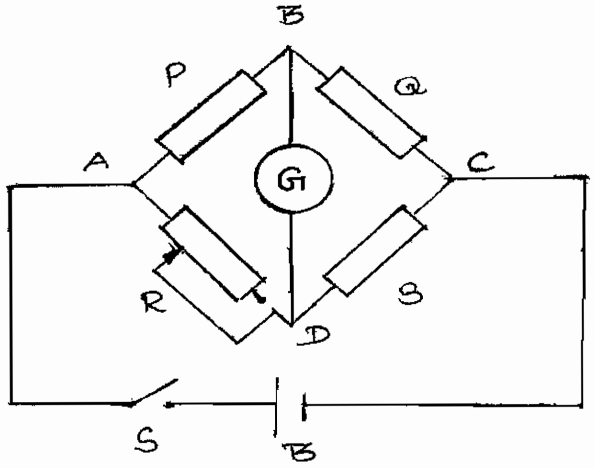

Fig. 7.19.4.

as the same. A to D the potential different.

= Current x Resistance

= I_2 x R

Potential Different at A to B = Potential Different at A to D.

$$= I_1P = I_2 R.$$

Hence $\frac{P}{R} = \frac{I_2}{I_1}$ ———— (1)

Hence $\frac{Q}{X} = \frac{I_2}{I_1}$ ———— (2)

In the equation (1) and (2) $\frac{I_2}{I_1}$ is equal

Therefore $\frac{P}{R} = \frac{Q}{X}$

Therefore $X = \frac{RQ}{P}$

7.20. OHM METER (MEDIUM RESISTANCE)

The range between one ohm to 100 k ohm are called medium resistance. They are measured by ohm meter.

Ohm meter is used to measure the Resistance, Current, Voltage and Continuity of the electric wires directly.

7.20.1. Series Type Ohm meter

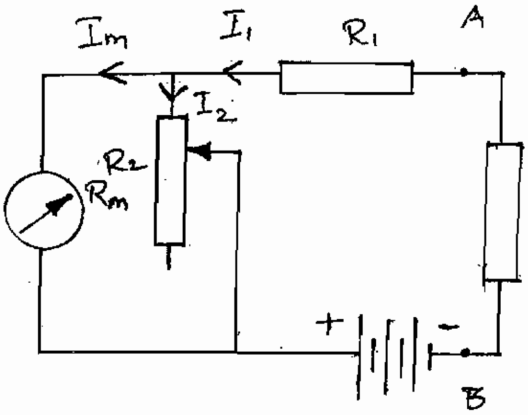

Fig 7.20.1.

Fig shows the circuit diagram of series type ohm meter. In this, a galvano meter is parallely connected to the rheostat R_2 and this setup is connected to the resistor R_1 in series. This circuit is connected to the point AB through a battery for measuring the value of resistance connected across the point AB. When the supply is given from the battery, the current will flow through the galvanometer and the pointer is deflected to show the readings. If the circuit is opened, there is no current flow in the galvanometer and the pointer is in zero position. This is denoted as α. The voltage of the battery is reduced depending upon the usage.

7.20.2. Shunt type Ohm meter

In this circuit, galvanometer is connected to the rheostat R_1 and battery E in series connection. The terminals of the galvanometer is connected to the unknown resistance. When the point AB is short circuited, then Rx = 0 and the current flowing through the galvanometer is zero. If AB is opened, the whole current will flow through the galvanometer. This type of meters are used to measure the low resistance value.

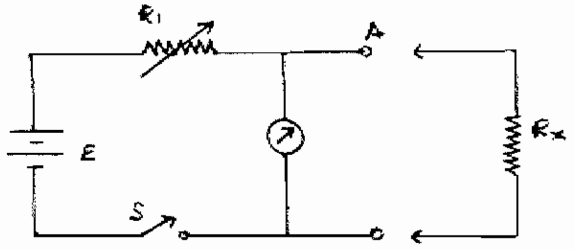

Fig. 7.20.2.

7.21. MEGGER (HIGH RESISTANCE)

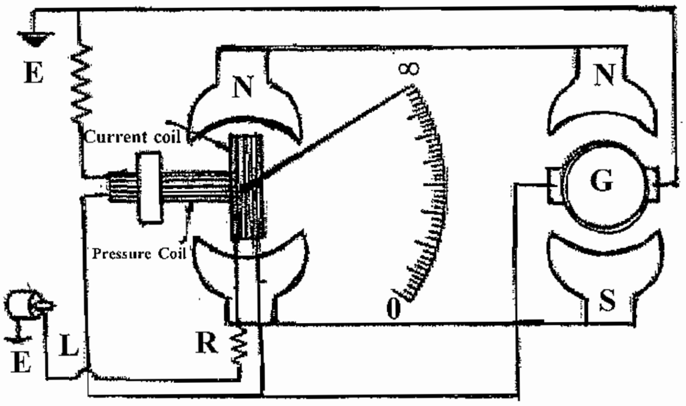

Fig. 7.21.

The range above 100 k ohm called high resistance. They are measured by megger. Insulation resistance, radio, amplifier, television and electronics appliances have this type of high resistance.

Meggar is used to measure high resistance and system insulation resistance. Meggar is an improved ohm-meter with a built in generator that is hand driven. The construction details are shown in figure.

Construction

It consists of two pairs of permanent, one set for ohm-meter side and the other for the generator and also consists of three coils known as (i) Current coil (deflection coil). (ii) Pressure coil (control coil) and (iii) Compensating coil. These coils are mounted rigidly and pivoted to control shaft and they are free to rotate. The current coil is short circuiting. The compensated coil is provided to give better scale proportions. Hence these two main coils, current coil and pressure coil, are connected in parallel across the small generator mounted in the instrument. Both these coils are in the field of special permanent magnet provided to shunt leakage current over the test terminals without passing through current coil of the instrument. Thus it eliminates errors due to leakage quantity given at moment of measurement.

Example: Ammeter, Voltmeter, Wattmeter.

Working principle

The unknown resistance is connected between the terminals L and E (Line and Earth). The generator handle is then steadily turned at uniform speed. There is a slip mechanism in the drive which ensures a limited speed.

When the resistance value is small, the current through the deflection coil will be high, its deflecting torque will be very high and hence the pointer will move to the extreme clockwise position indicating '0' or very low resistance value.

When the resistance value is high, the current through the current coil is high, its deflecting torque will be very high and the pointer will be taken to the extreme anticlockwise position, indicating infinity or very high resistance value.

7.22. Multi meter

This type of meter measures High resistance, DC current, DC voltage AC voltage with different measuring range. So this meter called as multimeter. The unknown resistance is fixed in between the test probe its shows the resistive value. The scale is marked for every extension and Electrical quantity. The Rotating switch of separate testing plugs selects the Different Extension and Electrical quantity.

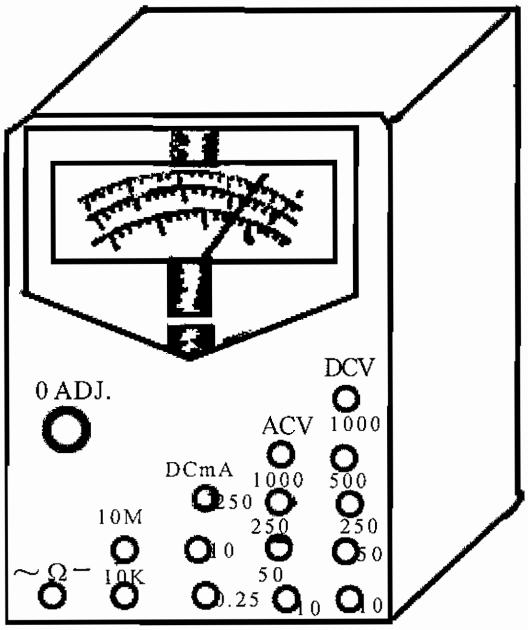

Fig.7.22.

7.23. WATT METERS

The product of Ampere and voltage is power. So in watt meter there is two coils are current coil and the other is pressure coil. The current coil is connected in series and pressure coil is in parallel to the circuit.

Watt meters are three types

1) Dynamo meter type.
2) Induction type.
3) Electro static type.

7.23.1. Induction type

This type of meter function as Induction Ammeter and Induction voltmeter. They are function only is alternating current. The construction is shown in the figure.

A Rotating Aluminium disc is fixed between two laminated core magnet. The pressure coil is wound in the top magnet. In the coil there is a current proportional to the voltage is flows:

In the bottom of the Disc an current coil is wounded over the laminated core magnet. And load current is passes through the coil. Both the electro magnets induce magnetic field. This magnetic field induces as current flow in the Disc. Because of the disc is a closed circuit there is an eddy current flows

in it and a magnetic field induced by the Eddy current. This magnetic field repulses each other and deflecting torque is induced.

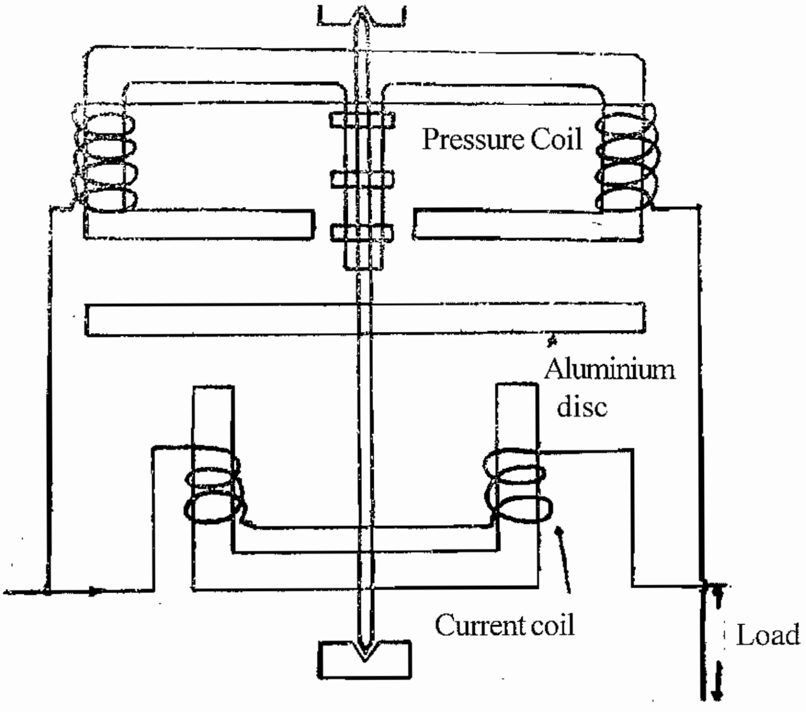

Fig. 7.23.1

7.24. TONG TESTER

To measure the current passing through high voltage circuits or transmission linse ammeter can not be used directly. Because, to connect the ammeter along the path of the current, the transmission line has be cut at a point and then the ammeter has to be connected in between the open line. Once the testing is over the line has to be rewired. This is not an efficient or feasible method. Tong tester is helpful in measuring the current through a line without cutting it open. The core of the Tong tester can be opened and the heavy current carrying line is feeder inside and the core is closed tight as shown in the figure. With the help of ammeter connected to the handle of the tong tester, the current flowing through the line can be calculated. It is also called as clip-on type meter. This is also used to measure high voltage across any two points.

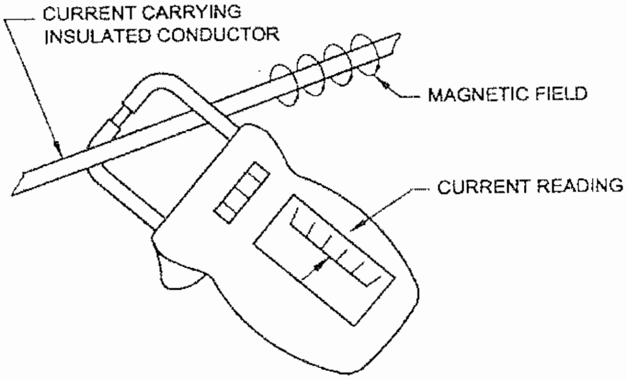

TONG-TESTER

Fig. 7.24

7.25. TECCO METER

Measurement of speed: Speed is defined as a scalar quantity. Electricians must know how to measure the speed of rotating electrical machines. The speed of rotating machines is measured in two ways.

Direct method (contact method)

Indirect (non-contact) method

In practice both the methods are being used by electricians.

In the direct method two types of instruments as stated below are used for measuring speeds.

Revolution counter and stopwatch

Tachometer

Revolution counters: Revolution counters are of two types; one is a dial type counter, which is an earlier version and has become obsolete. The other type is a digital counter which is shown in Fig 7.25.1. The spindle of the counter which is provided with a conical rubber bush is placed in the countersunk portion of the machine shaft for measuring speed. The revolution counter counts the number of revolution as long as its rubber brush is in contact with the shaft. To get the revolution per minute, it is necessary to have a timing device.

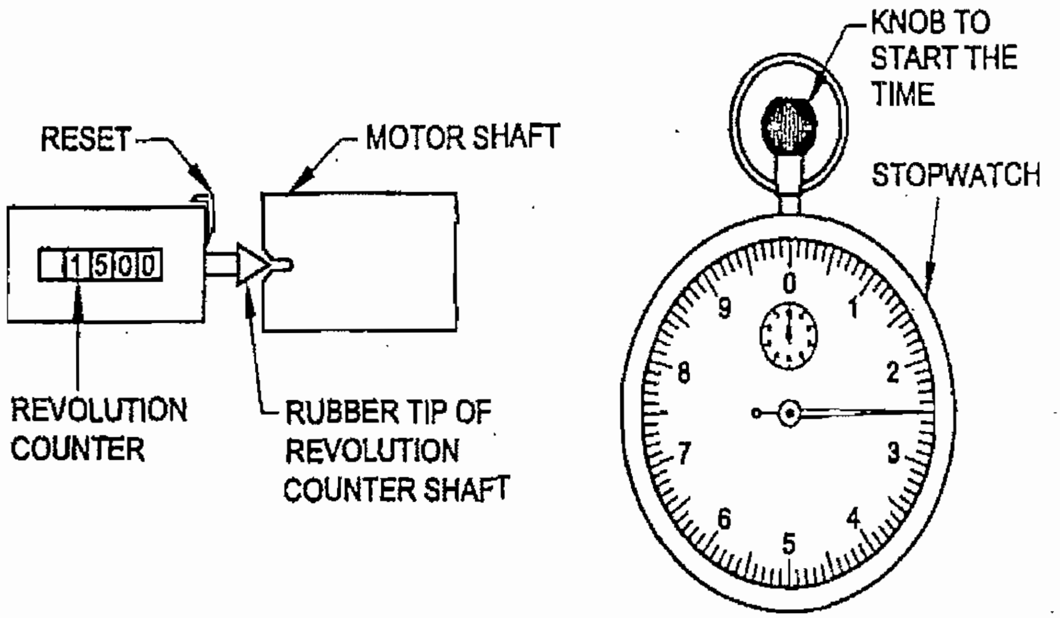

Fig. 7.25.1.

Hence to measure the speed of the rotating shaft with the revolution counter, a stopwatch is also necessary. Just when the rotation of the shaft speed is transferred through friction to the counter, the stopwatch begins to tick. Both the revolution counter and the stopwatch are stopped at the same time and the number of revolutions indicated in the counter per minute gives the speed of the shaft in r. p. m. The accuracy of this method is not very great, as human reflexes are involved.

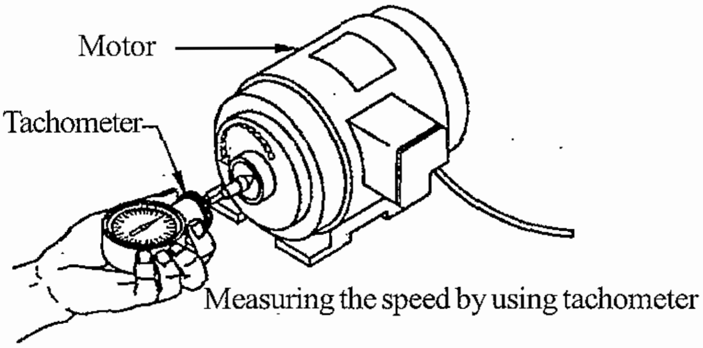

Fig. 7.25.2.

The second instrument used for direct measurement of speed is a tachometer as shown in Fig 7.25.2 The speed is directly shown by a needle over a calibrated dial.

The tachometer is used in the same way as that of the revolution counter except that a stopwatch is not required.

7.26. ENERGY METER

They are of two types

1. Single phase energy meter
2. Three phase energy meter

7.26.1. Single phase energy meter

a) Induction type single phase energy meter

There are four main parts of the operating mechanisms. They are,

1) Driving system
2) Moving system
3) Braking system
4) Registering system

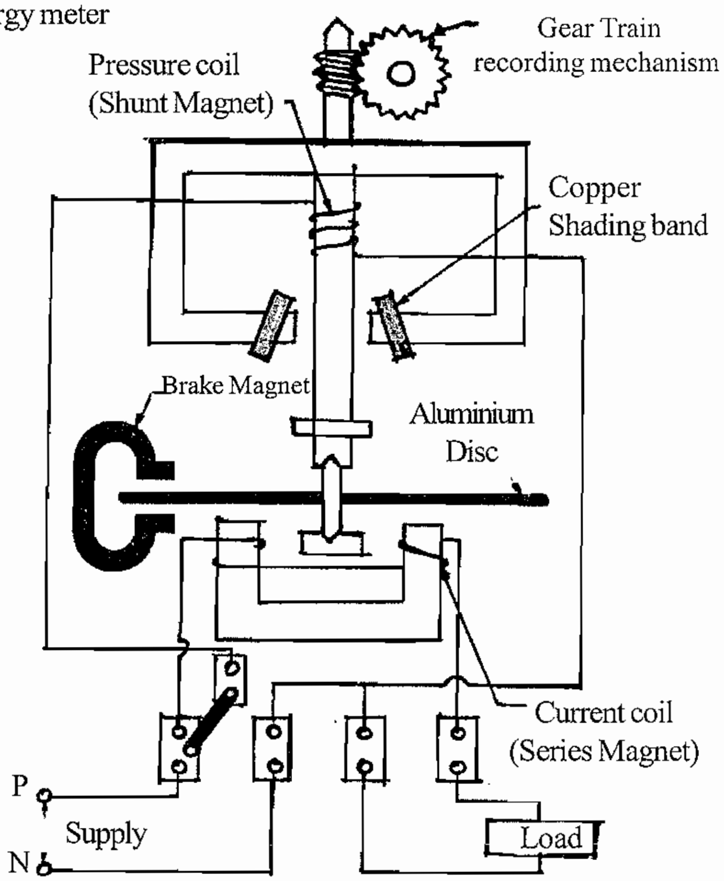

Fig. 7.26.1.

1. Driving system

The driving system of the meter consists of two electromagnets. They are, Series magnet, Shunt magnet

The cores of the electromagnets are made up of silicon steel laminations. The coil of series magnet is excited by the load current and it is called as current coil. The coil of shunt magnet is connected across the supply and therefore, carries a current proportional to the supply voltage and is called as pressure coil.

Copper shading bands are provided on the central links of the shunt magnet. The positions of these bands are adjustable. The function of these bands is to bring the flux produced by the pressure coil current to 90° from voltage. The two copper bands which are in outer limbs of the shunt magnet are for fiction compensation.

2. Moving system

This system consists of an aluminium disc mounted on (shaft) light alloy shaft. This disc is positioned in the air gap between series and shunt magnets. The shaft top end is engaged in a bearing cup and the shaft rests and runs on a hardened steel pivot, screwed at the base of the shaft. The pivot is supported by a jewel bearing. The threaded portion on top of the shaft will engage a pinion on the energy recording mechanism.

3.Breaking system

A permanent magnet positioned near the edge of the aluminium disc forms the breaking system. The disc moves in the field of the magnet and thus provides a breaking torque. The position of the permanent magnet can be adjusted so as to adjust or vary the breaking torque.

4. Registering or counting mechanism

The function of the registering mechanism is to record continuously a number which is proportional to the revolutions made by the moving system and hence the energy in KWh.

Principle of operation

The supply voltage is applied across the pressure coil. The pressure coil magnet produces a flux ϕ_{sh} proportional to the supply voltage. This flux includes an eddy current in the disc. Similarly the load current I flow through the current coil and produce a flux ϕ_{se} proportional to the load current. This flux also produces eddy current in the disc. Due to interaction of each eddy current with the other flux, there is a net driving torque on the aluminium disc. Since the speed of rotation depends on the power at the instant.

7.26.2. (b) Three phase energy meter

Three phase energy can be measured with a two element energy meter just as in the case of three phase power measurement. The fig shows the circuit diagram of 3 phase energy meter.

There are two discs maintained on the same spindle that drives a single counting gear train and two separate brake magnets. Each element is similar in construction to the single phase meter.

It is essential that the driving torque of the two elements must be exactly equal to the amount of power passing through each element. Thus in addition to normal compensating device attracted to each elements, an adjustable magnetic shunt is provided on one or both the elements is made with the pressure coils are connected in parallel and the current coils are connected in series in such a manner that the torques produced by the two elements oppose each other. The magnetic shunt is adjusted to a position where the two torques are exactly equal and opposite and therefore there is no rotation of disc.

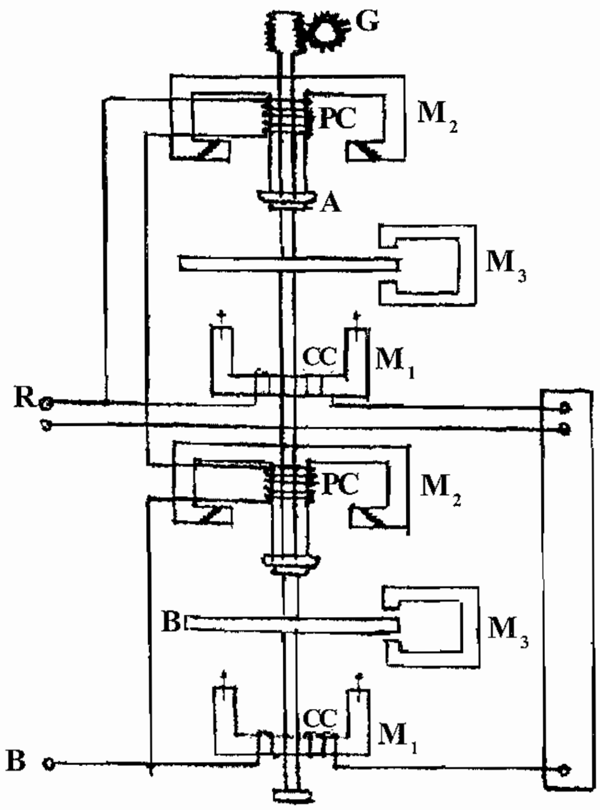

M_1 - **Series magnet**
M_2 - **Shunt magnet**
M_3 - **Break magnet**
A - **Copper shading band**
B - **Aluminium disc**
PC - **Voltage coil**
CC - **Current coil**
G - **Gear train**

Fig. 7.26.2.

Questions

Part - A

I. Choose the Correct Answer

1) The frequency of A.C. in India is,

a) 25 Hz b) 60 HZ c) 50 HZ d) 100 HZ

2) The angular displacement between the phase of a polyphase system is

a) 120 electrical degree b) 0 electrical degree
c) 90 electrical degree d) 180 electrical degree.

3) In purely Inductive load on a.c the current .... by ....

a) lead - 0° b) lag - 0° c) lead - 90° d) lag - 90°

4) Current in purely capacitive circuit .... the voltage by .... degree electrical.

a) lead - 0° b) lag - 0° c) lead - 90° d) lag - 90°

5) Two watt meter method is used to measure three phase .... load.

a) balance load b) unbalanced load
c) balance and unbalance load d) only Resistive load.

6) To convert mechanical power into electrical power multiply the power by,

a) 746 b) 846 c) 946 d) 646

7) The power factor of a.c. purely resistive circuit is

a) 90° lagging b) 90' leading c) 60' leading d) unity.

8) The permanent magnet moving coil type instruments are best suited for,

a) A.C. measurement b) D.C. Measurement C) A.C/DC measurement d) frequency measurement.

9) The moving Iron type instruments are suitable for

a) D.C. Mearuements only b) A.C. measurements only
c) AC/DC measurement d) Resistance measurement.

10) Pen used in measuring instruments is,

a) Indicating Instrument b) Recording Instruments
c) Integrating Instrument d) None of these.

11) Ammeter is connected with load in,

a) Series b) Parallel c) Series parallel d) None of these.

12. Voltmeter is connected in,

a) Series b) Parallel c) Serics Parallel d) Non of these.

13. Tacho meter is used for measuring

a) Frequency b) Power c) Voltage d) Speed in RPM.

14. Multi meter is called as,

a) Wattmeter, b) Tong tester c) AVO meter d) Energy meter.

Part - B

II. Answer the following questions in one word

1) How many electrical degrees are their in one cycle?
2) What is the current and voltage relationship in the purely resistive circuit?
3) What is the value of power factor in the purely inductive circuit?
4) What is the use of inductance?
5) What is the unit of frequency?
6) What is the current and voltage relationship R.C. series circuit?
7) What is X_L denotes in AC circuit?
8) What is X_C denotes in AC circuit?
9) What is the material generally used for control springs?
10) Can you use the moving coil type meter on a.c.?
11) Which meter the ammeter or voltmeter has high value of resistance?
12) In which meter having uneven scale?
13) What is the nature of supply which in used in megger?
14) If the terminals of ohm meter are short circuited what will be the reading of the instruments?
15) How many main coils are there in an energy meter?
16) Which meter is used for measuring current without cutting live wire?

Part - C

III. Answer the following questions in briefly

1. What is alternative current?
2. What is one cycle?
3. What is frequency?

4. What in RMS value in AC current?

5. What is power factor?

6). What is impedence?

7). How X_L is calculated?

8) How is watt meter connected?

9. What are the types of measuring instruments?

10. Why it is called as moving coil type instruments?

11. What are the types of moving Iron Instruments?

12. What is multimeter?

13. What is the use of tongtester?

14. What is the use of Tachometer?

Part - D

IV. Answer the following questions in one page level

1) What are the advantage and disadvantages of AC Current?

2) Define:- (i) Maximum value (ii) Peak factor (iii) form factor (iv) Average value.

3) Draw R.L series circuit and explain.

4) Draw R.Cseries circuit and explain.

5) Explain (i) Star connection (ii) Delta connection

6) Explain (i) Voltmeter (ii) Ammeter.

7) Draw the diagram of three phase energy meter?

Part - E

V. Answer the following questions in two page level

1) Draw the R.L.C. series circuit and explain?

2) Explain the classification of measuring instruments?

3) Explain the working principle of moving coil Instruments?

4) Explain the wheat stone bridge method measuring Resistance?

5) Explain the working principle of single phase energy meter?

8. TRANSFORMER

Introduction

Generating stations generate electricity at a voltage of 11 KV. The generating voltage is limited to 11 KV because higher voltage in generator leads to the problems in providing insulation. But at the consumers end most of the AC motors operate on 400 V. The power from the generating station is to be brought to the consumers end through transmission and distribution lines. The transmission voltage is either 66 KV, 110 KV or 230 KV; because a high voltage is desirable for transmitting large quantity of electrical power. Transmission of power with high voltage reduces the line current for a given power. Such reduction in transmission line current has the following advantages:-

1. Less I^2R less in the transmission line
2. Less voltage drop in the line
3. Efficiency of transmission is increased
4. Volume of conductor required is less

Let us assume that the transmission voltage is 110 KV. So the voltage of 11 KV has to be stepped up to 110 KV at the generating station. At the receiving end of the transmission line, 110 KV has to be stopped down to 11KV. This 11 KV has to be again stepped down to 400 V before it can be supplied to the consumers.

The device which is used for stepping up or stepping down of voltages is known as transformer. They can step up or step down alternative voltage only. This is the basic reason for the adoption of A.C. system for generation, transmission and distribution.

Working Principle of a transformer:

A transformer is a static (Stationary) apparatus by means of which electric power in one circuit is transferred into another circuit without changing the frequency. It operates on the principle of mutual induction between two (or more) inductively coupled coils. In its simple form, it consists of two inductive coils which are electrically separated but magnetically coupled to a core as shown in fig: 8.1. If the coil is connected to a source of alternating voltage on alternating flux is set up in the laminated core. Most of the flux is linked with the other coil. Thus flux is called mutual flux.

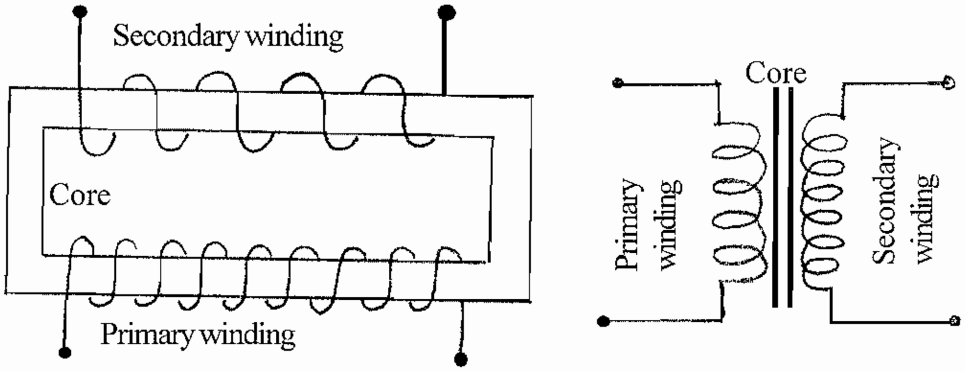

Fig: 8.1. Diagramatic representation of a simple transformer

As per Faraday's laws of electromagnetic induction, an EMF is induced in the second coil. If the second coil circuit is closed, a current flows in it and thus electric energy is trans forred from the first coil to the second coil. The coil which is connected to the a.c. supply is called as **Primary winding**. The coil which is connected to the load is called as **Secondary winding**.

The primary winding receives its energy from the alternating source. Depending up on the degree of magnetic coupling between the two circuits, energy is transferred from one circuit to the other.

Constrational Details

i) The iron core

ii) Primary and Secondary windings.

iii) Insulation of windings.

iv) Tanks, cooling methods, conservations etc.

As there are no moving parts in a transformer, the construction is simple. The main parts of transformer noted above are shown if

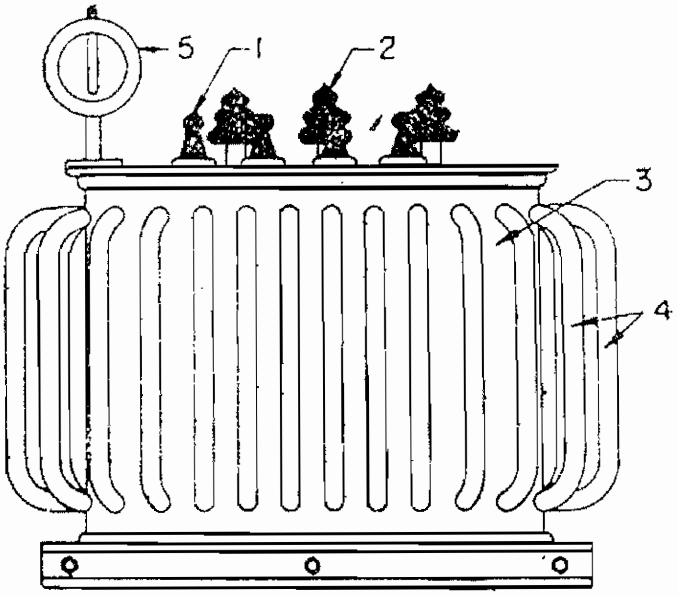

1. L.V. Terminal Bushing
2. H.V. Terminal Bushing
3. Transformer Tank
4. Cooling Tubes
5. Conservator Tank

Fig 8.2. Important parts of a Transformer

For the magnetic circuit a core of high permeability silicon steel is used, Each lamination is of thickness 0.35 mm to 0.5 mm. There are three types of construction.

1) Core type 2) Shell type 3) Berry type.

The berry type construction is basically a shell type construction with magnetic path distributed around the windings. This is not commonly used.

The primary and secondary windings consists of copper conductors normally of suitable cross – sectional area, properly insulated. The number of turns in the winding is fixed based on the voltage. There are two main types of windings, concentric cylindrical and sandwich. The coils are circular in shape. Varnished cotton or paper is used for insulation. Low voltage windings are placed nearest to the core in the concentric winding. Each layer is separated from the other by a small paper, in low output transformers. In large transformers, each winding is placed on a separate former. In the sandwich type of winding, the two windings are placed in alternate layers. Half a layer of the low voltage winding is placed at the top and bottom.

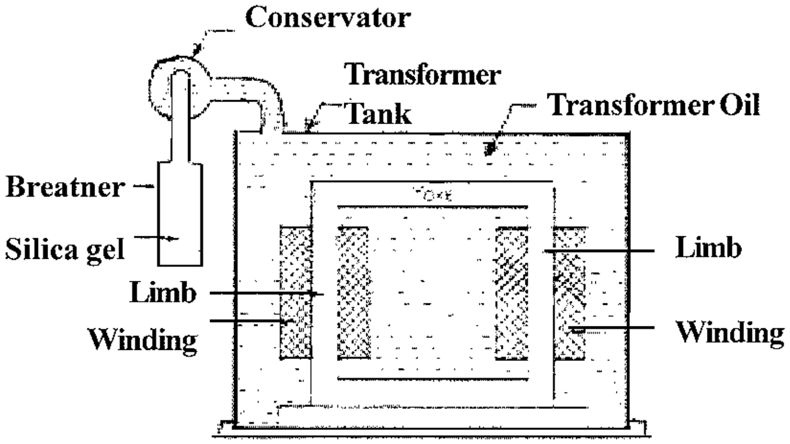

Fig 8.3. Conservator and Breather

Eddy currents in the core and I^2R losses in the windings produce heat in the transformer. To keep down the temperature in the windings, the heat produced has to be removed. Natural air cooling is used for small transformers. For large output transformers oil cooling is used. Oil provides insulation, besides cooling. The transformer is placed in side the tank. The tank is filled with transformer oil and sealed. The heat is passed to the oil. The oil circulates around the tank by convection and carry the heat to the tank walls. One method of increasing the surface area of the tank is to provide vertical tubes on the sides of the tank so that oil can circulate through them. Heat dissipation is accelerated. The oil used for cooling of transformers is got by refining crude petroleum. This mineral oil has good insulating property. In very large transformers effective cooling is achieved by forced oil circulation by pumps. Conservator is a separate small cylindrical tank fixed on the top of the transformer tank, to avoid the whole surface of the transformer oil to be exposed to atmosphere. The whole of the transformer tank and a part of the conservator are filled with oil. The breather is connected on the side of the conservator. Silicagel or calcium chloride in the breather ($cacl_2$) absorbs the moisture and allows dry air to enter the tank of the transformer.

Core type Transformer

A core type transformer is one in which there is one iron path. The windings are wound on two opposite limbs.

The magnetic circuit is made up of laminated iron core. The core is laminated to reduce the eddy current loss occurring in the core. Silicon steels are used to reduce the hysteresis loss in the iron core. Laminated sheets are insulated from one another by a thick layer of varnish insulation. Presently cold-rolled grain-oriented (CRGO) silicon steel laminations are used for cores. Small core type transformers

are made rectangular section core limbs. The core strips are assembled in such a way that the joints in alternate layers are staggered so that narrow gaps, through the cross section of the core, are avoided. In large out put core type transformers, if the cross section of the core is circular, it is economical.

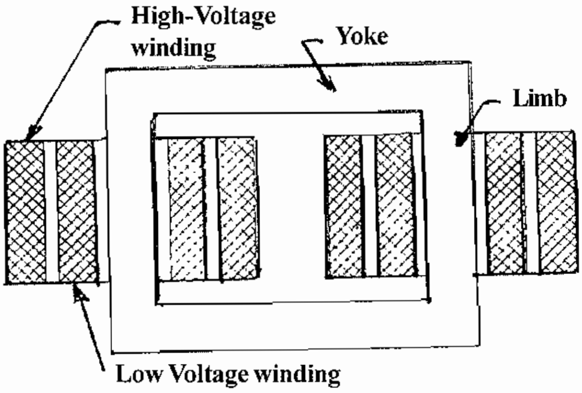

Fig. 8.4. Core-type

For a given area, circular cross section gives minimum circumference. This reduces the length of the mean turn of the winding and hence the cost of the winding wire. The produce circular cross sectional area of limb, the width of each lamination. Must be made variable (refer fig 8.5 a). This is uneconomical. To overcome this, the core section is arranged in steps of three different widths (refer fig 8.5. b)

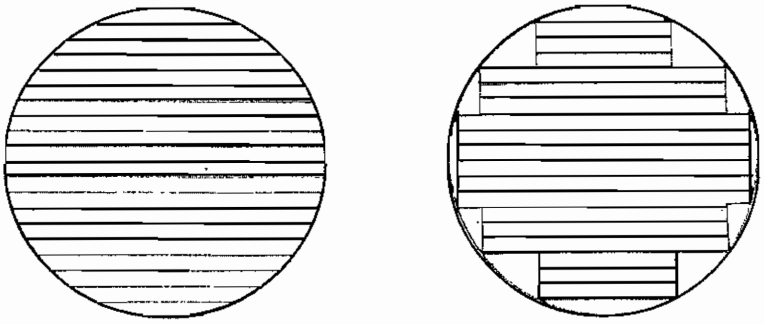

Fig. 8.5

a) Core cross section laminations of variable widths.

b) Core cross section laminations with three different widths.

Shell Type Transformer :-

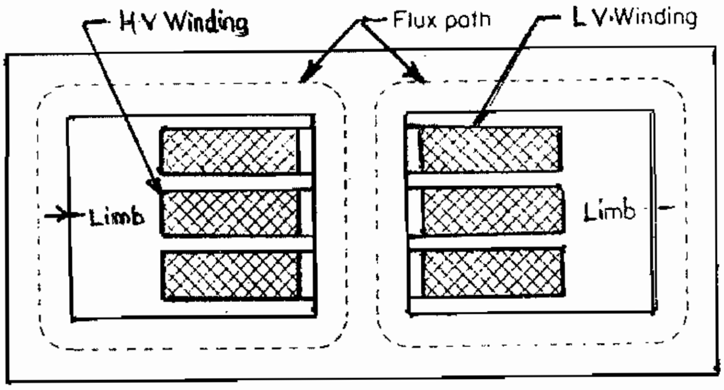

Fig. 8.6. Shell – Type

In shall type, there are two parallel magnetic paths into which the flux the central limb can divide.

The primary and secondary windings are placed on the central limb one above the other. This gives a better magnetic coupling. The magnetic circuit is made of laminated iron core. In a shell type transformer, the core surrounds the windings. In general the shell type is more economical for low voltage transformers and the core type construction is more suited for high voltage transformers.

Coil assembly

For a given area, to have minimum periphery so as to reduce the cost of winding wire and for easy construction. Cylindrical coils are used. A stopped core is used. The core laminations are bolted together. The bolts are insulated from the core to avoid eddy currents by employing Synthetic Resin Bonded Paper (SRBP) tubes. In each limb, a stiffening plate is used to prevent bulging of laminations between bolts. Surrounding the limb, SRBP cylinder is placed. This supports the L.V. winding is provided near the core, to reduce the heavy insulation. Spacers are provided between L.V. and H.V. windings. Thus cooling ducts are formed. This ensures free flow of coils. L.V. and H.V. windings are insulated from each other by bakelite cylinders. The bottom yokes have clamping channels.

The entire core is first built up. The top yoke is pulledout one by one. The already wound L.V. and H.V. windings are placed over the limbs along with insulating cylinders. The top yoke is then put in position and clamped.

EMF Equation of a Transformer:

Let a transformer have,

Primary turns = N1

Secondary turns = N2

Maximum value of flux in the core linking both the windings = ? m in webers

Frequency of a.c input in H.Z = f.

The flux in the core will very sinusoidally as shows in figure 8.7.

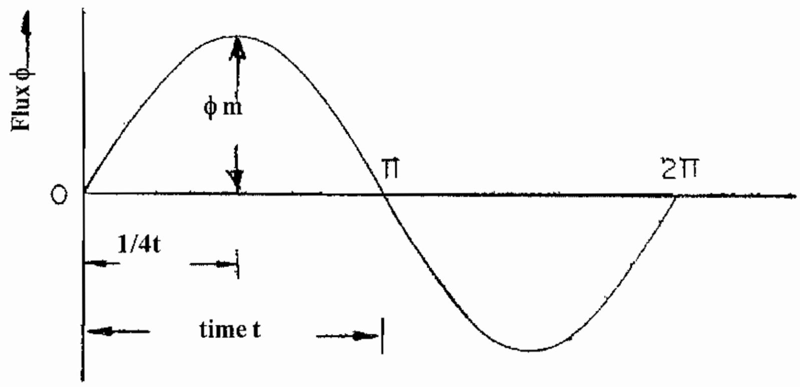

Fig. 8.7.

The flux in the core increases from zero to a maximum value ? m in one quarter cycle (¼ second)

There fore, Average rate of change of flux $= \frac{\phi_m}{\frac{1}{4f}} = 4f\phi_m$

Therefore, Average e.m.f. induced

Per turn = Average rate of change of flux x 1.

$= 4f\phi_m$ volts.

The flux varies sinusoidally. Hence the r.m.s. value of induced voltage is obtained by multiplying the average value by form factor, which is equal to 1.11 for a sine wave.

There fore R.M.S. value of induced e.m.f.

Per turn = 1.11 x 4 ϕ_m m volts.

$= 4.44\, f\phi_m$ volts.

The primary and secondary windings have N_1 and N_2 turns respectively.

R.M.S. value of induced R.M.F. in primary. $E1 = 4.44\, f\phi_m N_1$

R.M.S. value of induced e.m.f. in secondary, $E2 = 4.44\, f\phi_m N_2$

In an ideal transformer on no load,

Applied voltage $V_1 = E_1$

Secondary terminal voltage $V_2 = E_2$

Voltage Ratio

The ratio of secondary voltage to primary voltage is called voltage transformation ratio. It is represented K.

$$\frac{E_2}{E_1} = \frac{V_2}{V_1} = \frac{N_2}{N_1} = K$$

Current Ratio

Neglecting the losses, Input volt ampere = output-volt ampere. $V_1 I_1 = V_2 I_2$

$$\frac{I_2}{I_1} = \frac{V_1}{V_2} = \frac{N_1}{N_2} = \frac{1}{K}$$

Losses in a Transformer

The losses in a transformer consists of I^2R loss or copper loss and iron loss or core loss.

I^2R losses or copper losses

These losses occur is primary and secondary windings. Copper losses in a transformer is a variable loss. It varies as the square of the load current.

Iron loss or core loss

Iron losses consists of hysteresis and eddy current losses. They occur in the transformer core due to the alternating flux.

Hysteresis loss : When the iron core is subjected to alternating flux hysteresis loss takes place.

Eddycurrent loss : Eddy currents are induced in the cores. This loss is due to the flow of eddy currents. Thin laminations insulated from each other, reduce the eddy current loss.

Efficiency of the transformers :

The efficiency of a transformer is the ratio of output power to input power.

$$\text{Efficiency, } \eta = \frac{\text{Output power}}{\text{Input power}}$$

$$= \frac{\text{Output power}}{\text{Output power + losses}}$$

Auto transformer :

An auto transformer is a one winding transformer. Consider a single winding BC of N_1 turns wound on an iron core as shown in Fig : 8.8.

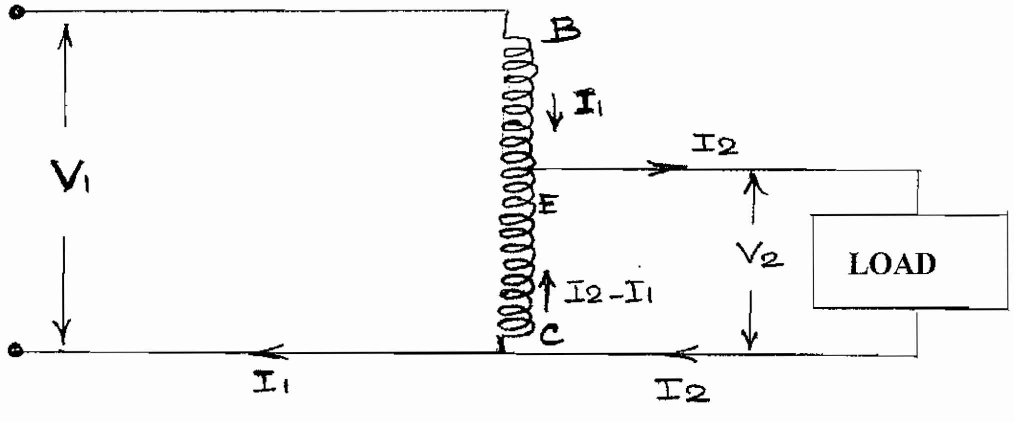

Fig : 8.8 Step Down auto Transformer

If this winding is connected to an a.c. voltage V_1, a flux will be set up in the core and an e.m.f. E_1 will be induced in the winding. If there is a tapping at point E such that

There are N_2 turns between E and C on e.m.f. E_2 exists between E and C such that $\frac{E_1}{E_2} = \frac{N_1}{N_2}$ when a load is connected across the terminals E and C, a current I_2 flows. The m.m.f. due to I will be balanced by m.m.f. due to I_1. This arrangement is referred to as an auto transformer. If point E is a sliding contact, a continuously variable output voltage can be made available.

Step down auto transformer:-

Fig : 8.8. shows a step down auto transformer. V_2 is less than the input voltage. If core loss, Copperloss, magnetizing current and leakage reactance core neglected,

$$\frac{V_1}{V_2} = \frac{I_2}{I_1} = \frac{N_1}{N_2}$$

The current I_2 is greater than I_1. The distribution of currents are indicated in Fig : 8.8.

The voltampore delivered to load is V_2I_2. This may be written as $V_2I_2 = V_2I_1 + V_2\,(I_2\text{-}I_1)$

V_2I_1 gives the voltamperes transferred conductively to the load through the winding part BE and $V_2\,(I_2\text{-}I_1)$ represents the voltamperes transferred inductively to the load through the winding part EC.

Advantages :

When comparing with 2 winding transformer.

1. Copper required is very less.

2. The efficiency is higher.

3. The saving in conductor material and hence cost is less.

4. More smooth and continuous variation of voltage.

Disadvantages:-

i) Direct link between high voltage and low voltage sides. There is no isolation, as in the case of a two winding transformer.

ii) If there is an open circuit between points E and C (Fig: 8.8) the full primary voltage would be applied to the load on the secondary side.

iii) The short circuit current is greater than, that of a two winding transformer.

Applications of Auto Transformer :

1) As a booster of supply voltage a small extent.

2) Three phase auto transformers are used to starting A.C. 3 phase induction motor.

3) It can be used to vary the voltage to the load. Smoothly from zero to the rated voltage.

4) Three phase auto transformers are used in the inter connection of girds. Example 132 KV grid with 220 KV grid.

Three Phase Transformer :

Electric power is generated in generating stations, using three phase alternators at 11 KV. This voltage is further stepped up to 66 KV, 110 KV, 230 KV or 400 KV using 3 phase power transformers and power is transmitted at this high voltage through transmission lines. At the receiving substations,

these high voltages are stopped down by 3 phase transformers to 11 KV. This is further stepped down to 400 volts at load centres by means of distribution transformers. For generation, transmission and distribution, 3 phase system is economical. Therefore 3 phase transformers are very essential for the above purpose. The sectional view of a 3 phase power transformer is shown in Fig : 8.9.

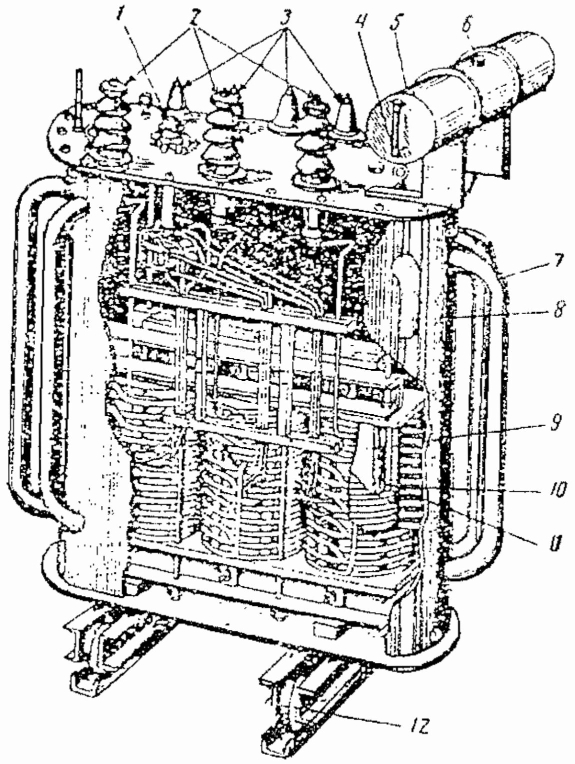

1. Tap-changer switch handle
2. Porcelain-bushing insulator (For high voltage)
3. Bushing insulators (For low voltages)
4. Oil gauge
5. Oil tank
6. Breather plug
7. Cooling pipes
8. Tank front wall
9. Core,
10. High voltage winding
11. Low voltage winding
12. Wheels or rollers.

Fig 8.9 100 KVA oil immersed power transformer

Construction of Three phase Transformer

Three phase transformers comprise of three primary and three secondary windings. They are wound over the laminated core as we have seen in single phase transformers. Three phase transformers are also of core type or shell type as in single phase transformers. The basic principle of a three phase transformer. Is illustrated in fig. 8.10 in which only the primary windings are shown. They are inter connected in star and put across three phase supply.

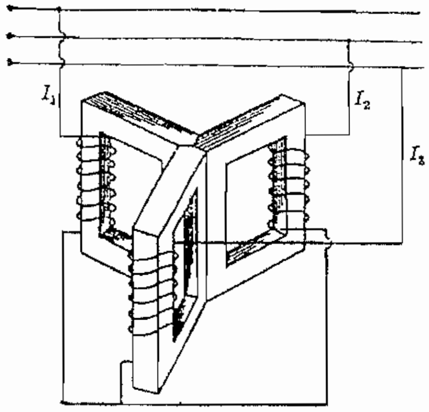

Fig 8.10 : 3-phase core-type Transformer

The three cores are 120° apart and their unwound limbs are shown in contact with each other. The centre core formed by these three limbs, carries the flux produced by the three phase currents I_R, I_Y and I_B. As at any instant $I_R+I_Y+I_B=O$, the sum of three fluxes (flux in the centre limb) is also zero. Therefore it will make no difference if the common limb is removed.

The core type transformers are usually wound with circular cylindrical coils. The construction and assembly of laminations and yoke of a three phase core type transformer is shown in fig : 8. 11. one method of arrangement of windings in a three phase transformer is shown in fig: 8.12. In this fig, the primary windings occupy the bottom portion of each limb.

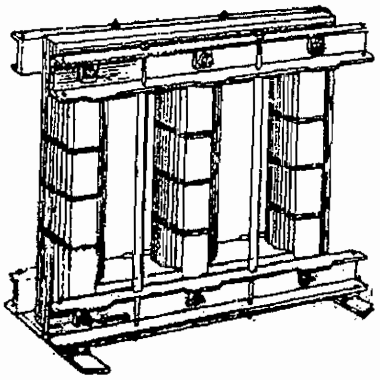

Fig. 8.11

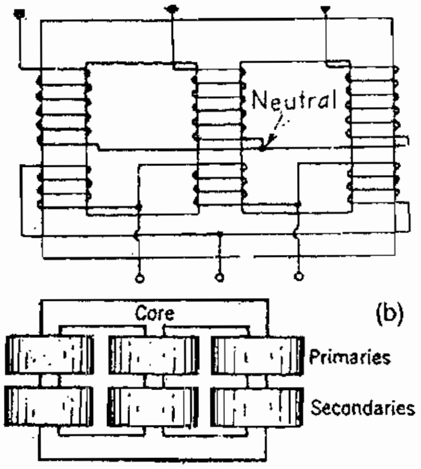

Fig. 8.12

In the other method the primary and secondary windings are wound one over the other in each limb. The low-tension windings are wound directly over the core but are, of course, insulated for it. The high tension windings are wound over the low – tension windings and adequate insulation is provided between the two windings.

The primary and secondary windings of the three phase transformer can also be interconnected as star or Dalta.

Three Phase Transformer connections:-

The identical single phase transformers can be suitably inter-connected and used instead of a single unit 3–phase transformer. The single unit 3 phase transformer is housed in a single tank. But the transformer bank is made up of three separate single phase transformers each with its own, tanks and bushings. This method is preferred in mines and high altitude power stations because transportation becomes easier. Bank method is adopted also when the voltage involved is high because it is easier to provide proper insulation in each single phase transformer.

As compared to a bank of single phase transformers, the main advantages of a single unit 3-phase transformer are that it occupies less floor space for equal rating, less weight costs about 20% less and further that only one unit is to be handled and connected.

There are various methods available for transforming 3 phase voltages to higher or lower 3 phase voltages. The most common connections are (i) star – star (ii) Delta – Delta (iii) Star – Delta (iv) Delta – Star.

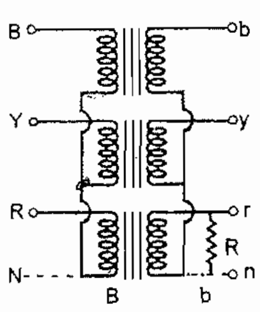

Fig. 8.13 Star-Star

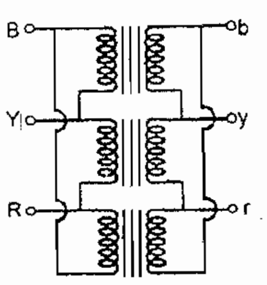

Fig. 8.14 Delta – Delta

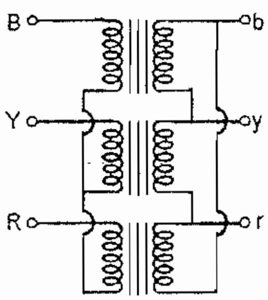

Fig. 8.15 Star- Delta

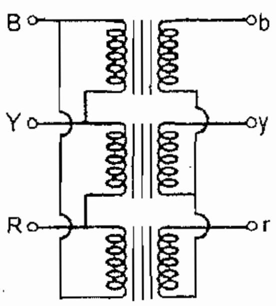

Fig. – 8.16 Delta – Star

The star-star connection is most economical for small, high voltage transformers because the number of turns per phase and the amount of insulation required is minimum (as phase voltage is only 1/3 of line voltage. In fig: 8.13 a bank of three transformers connected in star on both the primary and the secondary sides is shown. The ratio of line voltages on the primary to the secondary sides is the same as a transformation ratio of eacts single phase transformer.

The delta – delta connection is economical for large capacity, low voltage transformers in which insulation problem is not a serious one. The transformer connection are as shown in fig : 8.14.

The main use of star-delta connection is at the substation end of the transmission line where the voltage is to be stepped down. The primary winding is star connected with grounded neutral as shown in Fig : 8.15. The ratio between the secondary and primary line voltage is 1/3 times the transformation ratio of each single phase transformer. There is a 30° shift between the primary and secondary line voltages which means that a star-delta transformer bank cannot be paralleled with either a star-star or a delta-delta bank.

Delta-Star connection is generally employed where it is necessary to step up the voltage. The connection is shown in fig: 8.16. The neutral of the secondary is grounded for providing 3-phase, 4-wire service. The connection is very popular because it can be used to serve both the 3-phase power equipment and single phase lighting circuits.

Parallel Operation of Transformers

For supplying a load in excess of the rating of an existing transformer, a second transformer may be connected in parallel with it to share the total load.

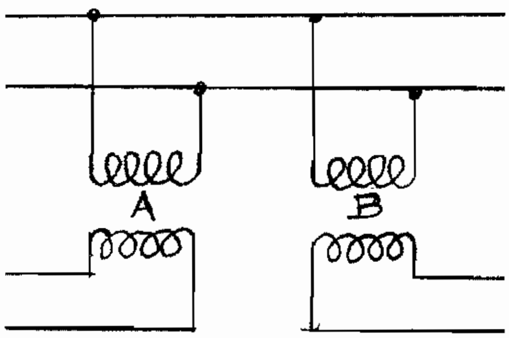

Fig : 8.17 Transformers connected in parallel to the same mains and supplying independent loads

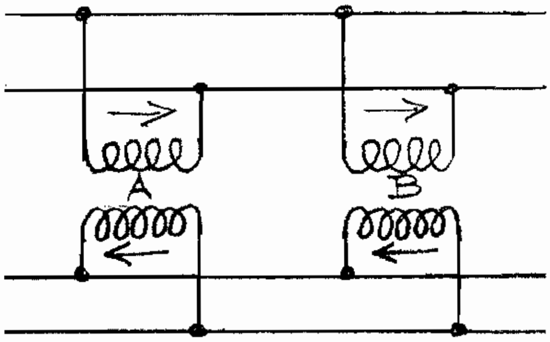

Fig : 8. 18 Transformers connected in parallel sharing total load

In parallel across a supply system of proper voltage, and their secondaries are connected to separate or independent circuits as in Fig : 8. 17. they operate independently of each other. When the secondaries are also connected in parallel as in Fig : 8.18, the transformers must have the same rated primary and secondary voltages. Otherwise the secondary emfs will be unequal, and a current will circulate between the machines, This current is to be limited only by the impedance of their windings. Since this impedance is small, such a light difference in secondary EMF will cause a large current to circulate. Therefore in connecting two or more than two transformers in parallel, it is essential that their terminals of similar polarities are joined to the same bus bars.

In order that the transformers may properly divide the load, the impedance drop in each must be the same at all loads. Thus each transformer must have the same percentage impedance. In general transformers will share the load inversely proportional to their respective impedances. For instance, if two transformers of the same rated KVA are to equally divide the load, they should have the same impedance. If one has twice the KVA rating of the other, it should supply twice the current. (the impedance of the higher rating transformer should have lower value compared to the other, because voltage drops should be same in both the transformers).

Conditions for satisfactory parallel Operation:

The following conditions should be fulfilled for the satisfactory parallel operation of transformers.

1) Polarity of transformers should be same. In case polarity is wrong, a dead short circuit may occur.

2) Equal voltage ratio is required to avoid local circulating currents between the transformer windings. With unequal voltage ratios, the secondary voltages on no-load will not be equal. When secondaries are connected in parallel, circulating current will flow.

3) The percentage impedance (Percentage voltage drop due to impedance of winding) of the transformer should be equal. For paralling 3. phase transformers in addition to the above points, the following conditions must also be fulfilled.

4) In case of 3 phase transformers, phase sequence should be same.

5) The transformers to be connected in parallel should belong to the same vector group.

Instruments Transformers

In D.C. circuits when high voltages are to be measured, low-range voltmeters are used with a high resistance connected in series with them. For measuring large currents, it is usual to use low range ammeters with suitable shunts. But in alternating current systems of high and moderate voltage, meter relays and other instruments are not usually connected directly to the power circuit. For this purpose, specially constructed instrument transformers known as are employed. By means of these transformers ordinary instruments of 150 Volts potential and 5 ampere current coils can be used to indicate accurately the voltage, current and power etc., in such circuits regardless of the line voltage or of the current they carry. Also low energy relays can be employed to operate protective and control apparatus.

Potential Transformers

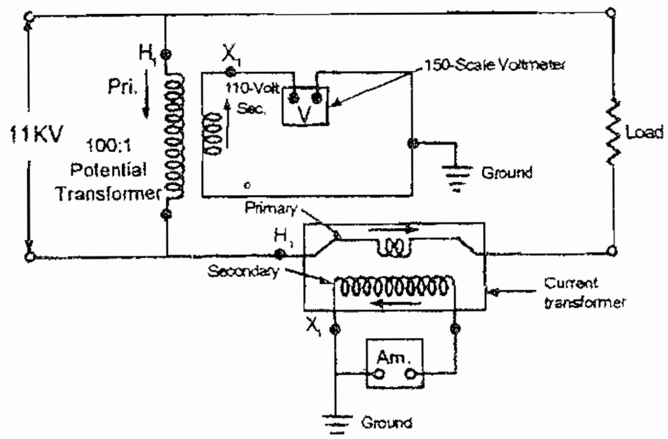

Fig. 8.19 Potential Transformer

Potential transformers do not differ much from the ordinary two winding transformers, except that their power rating is extremely small. These are step down transformers. The primary winding is connected directly across the power circuit. The secondary is usually wound for 110 or 120 volts, so that the voltage ratio depends upon the rated primary voltage. Meters and instruments are connected in the secondary side.

Fig : 8.19 represents a potential transformer connected to a 11KV line. Its voltage rating is 11000 to 110V or a ratio of 100:1. Thus the 150 V. voltmeter will indicate 110 volts or 1/100th of the line voltage. or the voltmeter scale can be multiplied by the transformer ratio. In some voltmeters its scale is calibrated to show the primary voltage directly. Thus the 150V range voltmeter indicates the line voltage directly. The secondary always should be grounded at one point to eliminate "static" from the instrument and further to ensure safety to the operator.

Current Transformers

The current transformer has a primary coil of only a 'few turns of thick wire connected in series with the line whose current is to be measured. The secondary consisting large number of turns is connected to the terminals of a low reading ammeter. The ammeter is thus entirely insulated from the line. Mostly the secondaries of all current transformers are wound for 5 ampers. Therefore the current, or transformation ratio is determined by the current rating of the power circuit.

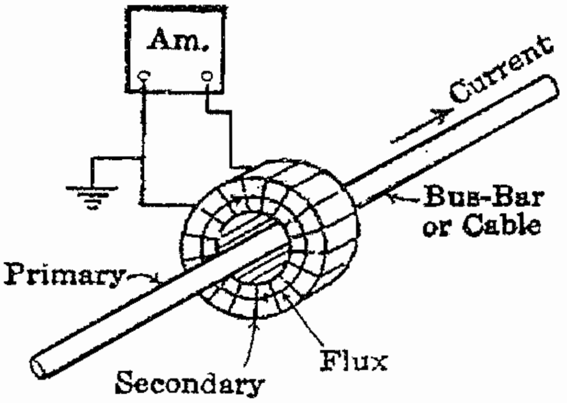

Fig : 8.20 Current Transformer

In Fig: 8.19 current transformer also is connected to measure the current in the 11 KV power system Assume there are 2 turns in the primary and 200 turns in the secondary. The current "ratio" in the transformer is 200:2 or 100:1 (reverse of turns ratio). If the line current is 500 amperes the meter will indicate 5 amperes. If the scale of the meter is marked suitably, it indicate the line current directly.

Fig: 8.20 shows how the large current through a bus-bar is measured by a current transformer. If the secondary of a current transformer becomes open circuited, a high voltage will exist across the secondary because the large ratio of secondary to primary turns causes the transformer to act as a stepup transformer which is dangerous to the operator. Therefore, the secondary of a current transformer should not be open circuited under any circumstances.

Protective Devices of Transformer

The protective devices in an oil cooled power transformer are discussed below:

1) Conservator

Transformer oil losses its insulating properties and is oxidised when it is in contract with the atmosphere. For this reason, the oil must not come in direct contract with the air outside. Conservators or oil expansion chambers are provided to prevent this absorption.

The conservator is a cylindrical verssel. It is fitted on the top of the tank. The tank is entirely filled up with oil. The conservator is filled with oil partly. (about 50%). The transformer oil gets heated due to the losses in a transformer. The volume increases due to heat and the level of oil in conservation increases. Air is expelled from the conservator through the breather. When the oil cools down, the volume decreases and the level of the oil in the conservator comes down. This is referred to as "breathing". The oil surface in the conservator is only exposed to oxidation. The sludge is thus confined to the oil surface in the conservator. If there is no conservator the sludge will stick to the cooling tubes. This will spoil the cooling effect.

ii) Breather

The breather is a small vessel. It is connected between conservator and air outlet. It contains silicagel. It is a dehydrating agent. The moisture is the incoming air is removed. The colour of the silicagel is **blue** when dry and **pink** when wet or damp.

iii) Explosion Vent

In the event of an accidental internal short circuit in the transformer, an arc is formed between the turns of the winding. Heat is produced by the arc. Due to this, a large volume of gas is produced. Provision must be made for rapid release of the gas. Otherwise high pressure will be builtup inside leading to the lip of the tank blown off. An explosion vent is provided, this reason on the tap of the tank. The explosion vent's mouth is covered by a diaphragon of glass or aluminium. Under normal conditions air is not allowed to come in contract with the oil. Under short circuit conditions. The diaphragon is ruptured due to high pressure. The gas is expelled to atmosphere. The high pressure gas escaping, may take a portion of the hot oil also. The hot oil may get splashed and cause injury to the workers in the transformer yard. For this reason it is bent downwards.

(iv) Bucholz Relay:

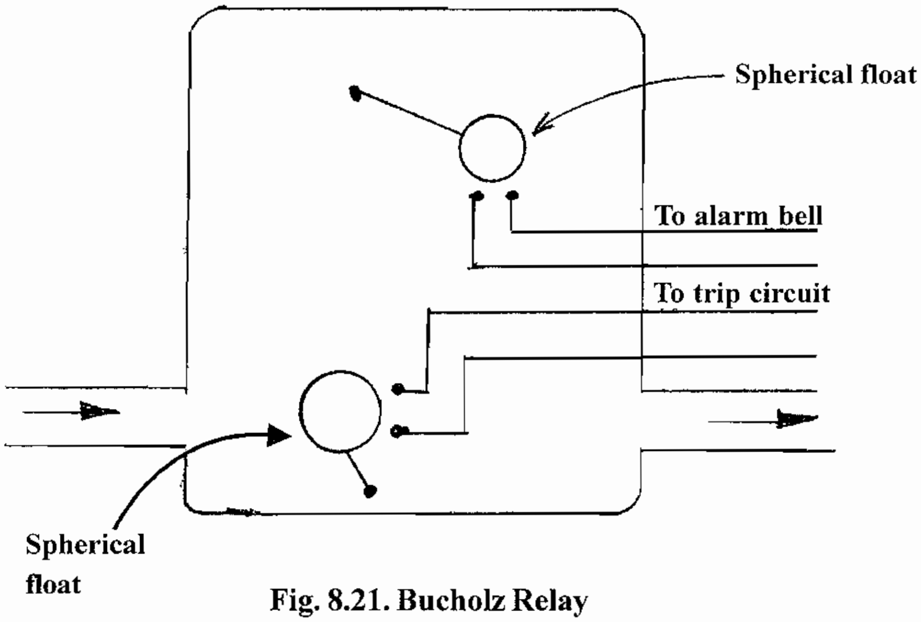

Fig. 8.21. Bucholz Relay

This is a device which be attached to an oil immersed transformer. This is fitted in the pipe connecting the transformer tank with the conservator.

It consists of two floats as shown in Fig : 8.21.

Two paris of electrical contracts are provided. These contacts may get short circuited under certain situations.

Gas is generated in the oil when insulation breaks down in a transformer. Quick generation of this gas leads to a serious fault. The gas rushes through the pipe and pushes the lower float to the right. The two lower contracts bridge together and closes to trip circuit of the circuit breaker. The transformer is out of circuit now. Suppose the fault develops slowly gas also is generated slowly. This may not be sufficient to move the lower float. This gas gets collected gradually in the top of the relay chamber. The oil level gets lowered. This causes the upper float to sink. It finally closes the second pair of contacts. This trips of circuit breaker or it may be arranged to ring an alarm bell. A fault can thus be detected and the transformer is switched out of circuit.

Transformer Oil:

Transformer oil is a mineral oil. It is obtained by refining curde petroleum. It is a good insulator. Its tendency to form, a sludge is very much less. The dielectric strength of oil is affected to a great extent by the presents of moisture. So it has to be kept dry. Transformer oil serves two functions.

(i) Cooling (ii) Insulation

Questions

Part - A

Choose the Correct Answer:

1. Transformer operates on the principle of

   a. Self induction b. Mutual Induction

   c. Maxwell's Corck screw rule d. Len's law

2. Silicagel in the breather absorbs.

   a. Moisture b. Dust c. Heat d. Vibration

3. Transformer core is laminated to reduce the

   a. Copper loss b. Wintage loss

   c. Hysteresis loss d. eddy current loss

4. Silicon steel sheets are used to reduce the

   a. Frictional loss b. mechanical loss

   c. Hysteresis loss d. eddy current loss

5. Potential transformers and current transformers are

   a. Outdoor transformers b. Indoor Transformers

   c. Instrument transformers d. Power Transformers

6. Conservator is a

   a. Main tank of a transformer b. Protective device of a transformer

   c. Earthing system of transformer d. Insulation material of a transformer

7. Transformer oil server the functions of

   a. Insulation and cooling b. Lubrication

   c. Only insulation d. only cooling

Part - B

Answer the following questions in one word:

1. How many windings are having a 3 ϕ transformer?
2. Write the name of the variable loss in the transformer
3. What type of transformer to be attached the Bucholz Relay?

4. What is the colour of Silicagel when it is dry condition?

5. Why the transformer oil is heated?

6. Write the generating voltage at generation stations.

7. What based the number of turns in the winding is fixed?

Part - C

Answer the following questions in briefly:

1. What are the advantages of transmission of power with high voltage for a given power?

2. What is the voltage ratio of a transformer?

3. State efficiency of the transformer?

4. What is the advantage of auto transformer?

5. What are the protective divices of transformer?

6. Write short notes on transformer oil?

Part - D

Answer the following questions in one page level

1. Explain the working principle of a transformer?

2. Explain the operation of an auto transformer?

3. Explain how to the Bucholz relay works as a protective device for a transformer?

Part - E

Answer the following questions in two page level.

1. Explain the connection of three phase transformer?

2. Explain the function in instrument transformers

   a) Potential transformer b) current transformer

9. D.C. GENERATOR

D.C. Machines can be used as a generator or as a motor. Hence D.C. Machines are classified in to:

i) D.C. Generator and

ii) D.C. Motor.

Basic Principle of DC Generator and Energy Conversion:

In general, an electrical generator is a rotating machine which converts mechanical energy into electrical energy.

D.C. generators work on the principle of electromagnetic induction. This is explained as follows.

According to Faraday's Laws of Electro-Magnetic Induction, when a conductor or a coil is rotated in a magnetic field in such a way, to cut the magnetic lines of flux, an e.m.f. is induced in a conductor or in the coil. If the circuit of the conductor or coil is closed in proper way, a current flows through the circuit. The magnitude of induced e.m.f. is proportional to the speed of rotation of the conductor, the flux in the magnetic field and the number of conductors or coils connected in series.

In d.c. generators the conductor or the coils are arranged on a cylindrical rotor called an armature. The armature is rotated in the magnetic field so as to cut the magnetic lines of flux. To rotate this armature, another rotating device called prime-mover is used. The prime movers used for this energy conversion may be water turbine or diesel engine or steam engine. The armature of the d.c. generator is driven by mechanical energy applied to its shaft. Thus the mechanical energy is converted in to electrical energy. Fig: 9.1.

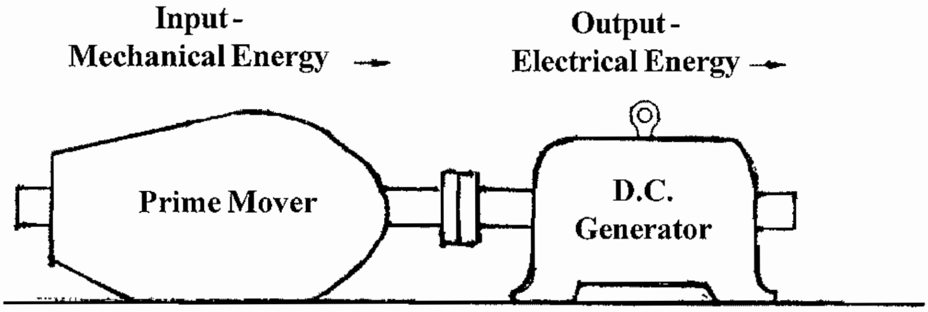

Fig. 9.1. Illustration of Energy conversion

The D.C. machine (D.C. generator or D.C. motor) has the following parts.

1. Poles or field poles to produce the magnetic flux.
2. An armature with conductors and
3. Relative motion between magnetic field and armature conductors.

In d.c. generators the magnetic field is stationary and the armature rotates. When the armature is rotated, the armature conductor cut the magnetic lines of flux, so a dynamically induced e.m.f. is induced in the armature. The e.m.f. thus induced in d.c. generator is of alternating one and this is converted in to direct e.m.f. by a device known as "Commutator". The Commutator is mounted at the one end of the

armature, on the same shaft of the armature. The direction of induced e.m.f. is determined by using fleming's right hand rule.

Constructional Details of Direct Current Machine:-

A direct current machine can be used as a generator or as a motor. When the machine is driven by a prime-mover it converts mechanical energy into electrical energy and is called a generator. If the electrical energy is supplied to it, it works as a motor and the energy conversion is from electrical to mechanical. There fore the constructional details of a d.c. generator and a d.c. motor are the same.

A direct current machine (generator or motor) has the following parts:

i) Yoke or magnetic frame.

ii) Field system – Pole cores, pole shoes, Field coils.

iii) Armature – Armature core, Armature windings, commutator.

iv) Brushes, Bearings, End covers, shaft, terminal box, etc.

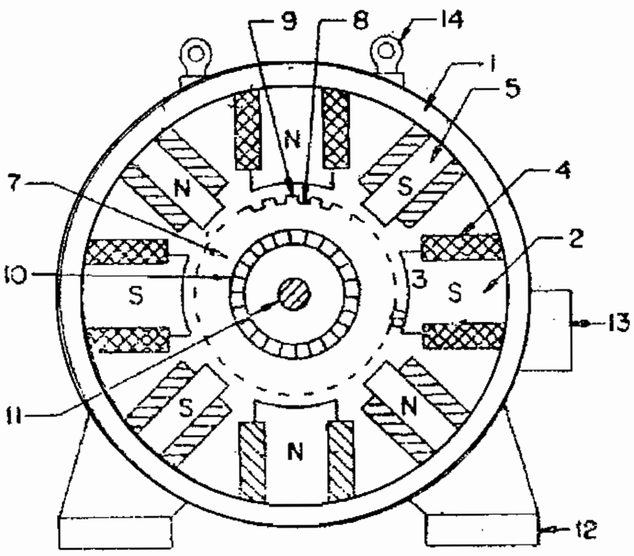

1. Yoke
2. Pole
3. Pole shoe
4. Field coil
5. Inter pole
6. Airgap
7. Armature
8. Slot
9. Teeth
10. Commutator
11. Shaft
12. Base
13. Terminal box

Fig. 9.2. D.C. Machine

Yoke or magnetic frame: -

The Yoke or frame is the outer cover of the machine. It is made of cast iron. But for large machines usually cost steel or volted steel is employed which has greater strength and high permeability.

The Yoke serves two purposes

1. It provides Mechanical support to poles acts as a protecting cover for the machine.
2. It carries the magnetic flux produced by the poles

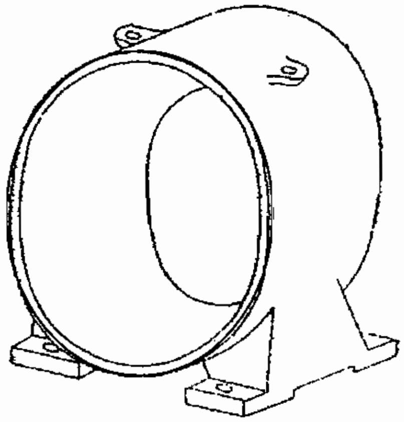

Fig. 9.3. (a) Yoke

Field Poles:

Laminated steel sheets are used to fabricate poles. The sheets are stacked for the required length and reveted together. The poles are fixed at the inner periphery of the hollow cylindrical frame. One each pole a former wound coil is provided. Insulated copper wire is used for the coils. The coils of all the poles are connected in such a way to form north and south pole alternatively. These are called field poles. When the wise of the coils carries a current, the pole become an electro-magnet and produces the magnetic flux. The purpose of providing pole shoes in the poles are,

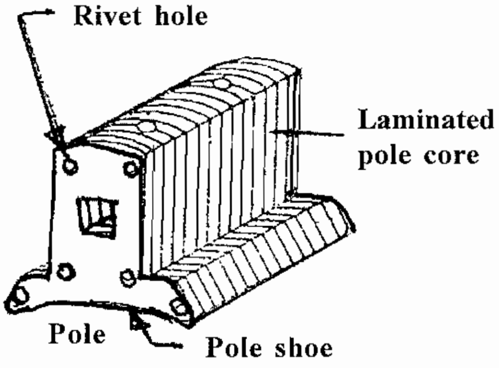

Fig. 9.3 (b) Pole

(i) It act as a mechanical support to the field coils.

(ii) They reduce the reluctance of the magnetic path and

(iii) They guide and spread out the flux in the air gap.

Inter Poles:-

Inter poles or the commutating poles are fixed to the frame as shown in fig: 9.2. These poles are provided to improve commutation. The winding of the interpole is connected in series with armature.

Armature:

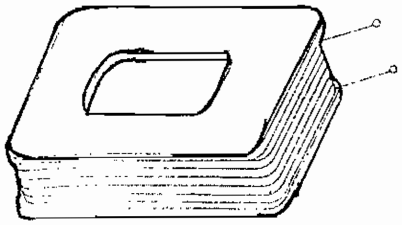

9.3. (c) Field coil

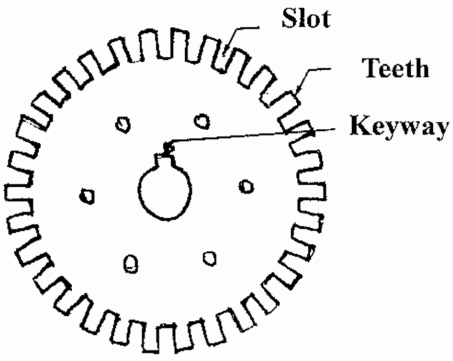

Fig. 9.3. (d) Armature lamination

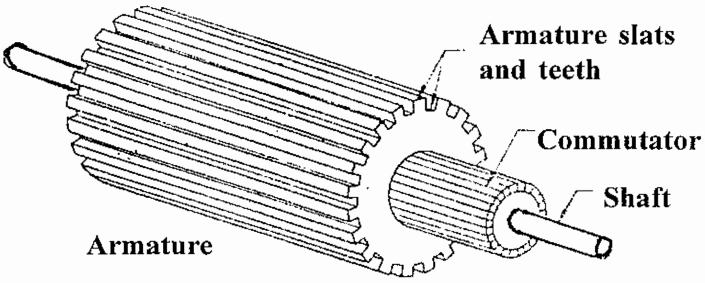

(e) Armature and commutator

Fig. 9.3. Parts of D.C. Machine

Armature is the rotating part of the machine. It is in cylindrical shape with slops on its periphery. It is built up of steel laminations. It is mounted on the shaft. The armature lamination is about 0.5 mm thick. By using laminated sheets to fabricate armature, the eddy current loss is reduced. If silicon content steel is used for armature core, the hysteresis loss also reduced. Due to losses (hysteresis, eddy current and I^2R losses)heat is developed in the armature. To dissipate this heat a fan is provided at one end of the armature. Ventilating ducts are also provided in the armature for the purpose of cooling.

Armature Windings:

The armature winding is placed on slots available on the armature surface. Former wound coils are used. The ends of the coils are jointed with the commutator segments. Insulated high conductivity copper wire is used. Lap winding or wave winding is used.

Commutator:

The commutator is made up of number of wedge shaped segments. If is of cylindrical shape. It is built up of segments of hard drawn copper. The segments are separated by their layers of mica. Each commutator segment is connected to the armature conductor by means of a copper strip called riser. In d.c. generator the commutator converts the alternating current induced in the armature into unidirectional current.

Brushes:-

The brushes are made of carbon. It is in the shape of rectangular block. The brushes are placed in brush holder. The brush holders are mounted on rocker arm. The brushes are arranged on rocker arm in such a way, it touches the surface of the commutator. The function of a brush is to collect current from commutator, in case of generator. When the machine is working as a motor the current to the armature conductors are fed through the brushes.

Bearings:-

Ball and roller bearings are used. For heavy duty conditions roller bearings are used.

Generation of electro Motive Force:-

Consider a magnetic field and a coil of single turn with sliprings as in Fig. 9.4.

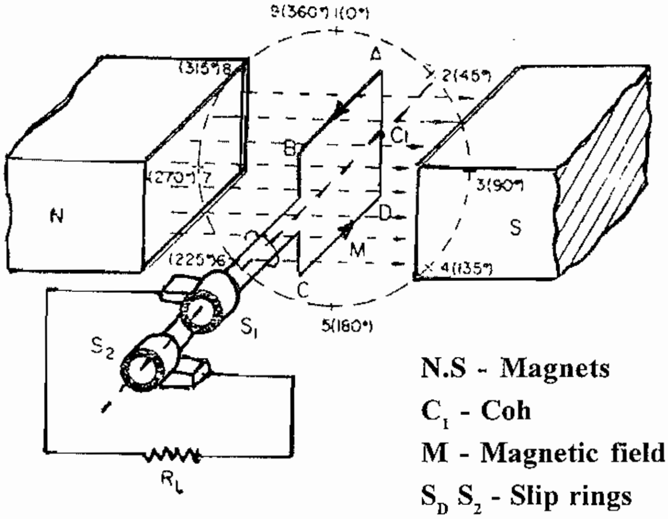

N.S - Magnets
C_I - Coh
M - Magnetic field
S_D S_2 - Slip rings
R_L - Load resistance

Fig. 9.4.

The coil is provided in between the poles. It is rotated in clockwise diection at a uniform speed in a uniform magnetic field.

At position 1, (Ø = O°), the plane of the oil is perpendicular to the direction of lines of flux. Now, the flux linked with the coil is maximum. But the rate of change of flux linkages is minimum. So, no e.m.f. is induced in the coil. That is at the starting position, e.m.f. induced is zero.

When the coil is rotated further, the rate of change of flux linkages increases upto position: 3, (Ø = 90°). At this position the plane of the coil is paralled to the lines of flux. Now, the flux linked with the coil is minimum, but rate of change of flux linkages is maximum. Therefore, at this position e.m.f. induced in the coil is maximum. On further rotation of the coil, from position 3, (Ø = 90°) to position 5 (Ø = 180°) the rate of change of flux linkages decreases, and the emf, induced is gradually decreased. At position 5 (Ø = 180°) it is reduced to zero. The magnitude of e.m.f. with respect to the coil position is indicate in Fig. 9.5.

From position 5 to position 7 (that is from 180° to 270°) the induced e.m.f. value starts again from zero to maximum and from position 7 to position 1. (from 270° to 360°) maximum to zero.

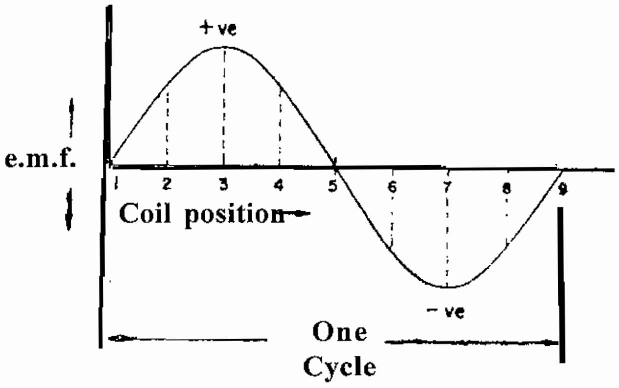

Fig. 9.5

The direction of induced current in the conductor is from A to B and from C to D during the revolution of the coil from position 1 to 5. (Applying fleming's right hand rule). In the next half revolution, from position 5 to 1, the direction of the induced current is from D to C and from B to A as shown in figures. 9.6 (a) and 9.6 (b).

The variation of the magnitude of e.m.f. are similar in both the half revolutions. But the induced e.m.f. during the first half revolution is positive and negative in the second half revolution. The current reverses its direction after every half revolution thus the quantity generated is an alternating one.

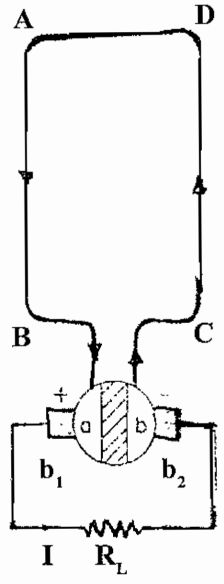

Fig. 9.6 (a)

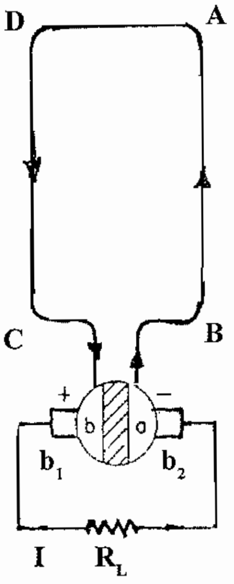

Fig. 9.6. (b)

ABCD - Coil
a_1 b - Split ring, Segments
b_1b_2 - Carbon brushes
R_L - Load resistance

To rectify the alternating quantity and get direct current splitrings (Fig. 9.7) are used instead of slip rings. By using split rings the current in the external load circuit is maintained in unidirection as shown in figures. 9.6 (a) and 9.6(b). The wave from of the current (obtained by providing the slip rings) through the external is as shown in figure. 9.8. the current thus obtained is unidirectional current but pulsating one.

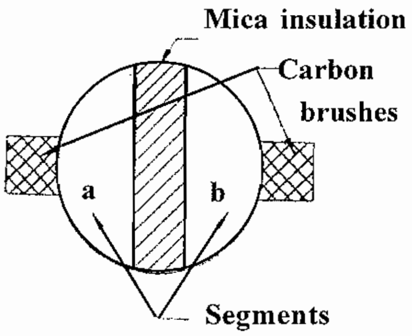

Fig. 9.7 (a)

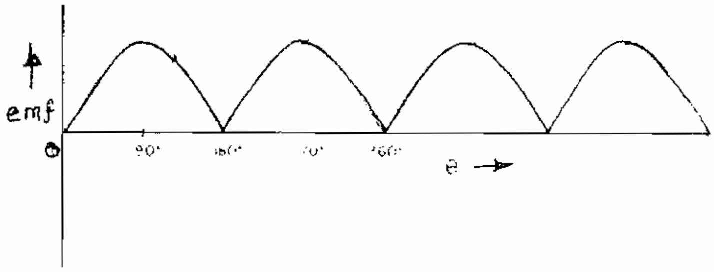

Fig. 9.8 (b)

In practical generator, the number of coils are large and are accommodated on the surface of the armature. Instead of split rings the commutator (with large number of segments) is provided at the one end of the armature. For example if there are two coils. Then the number of commutator of large number of segments may be less pulsating as shown in figure. 9.9.

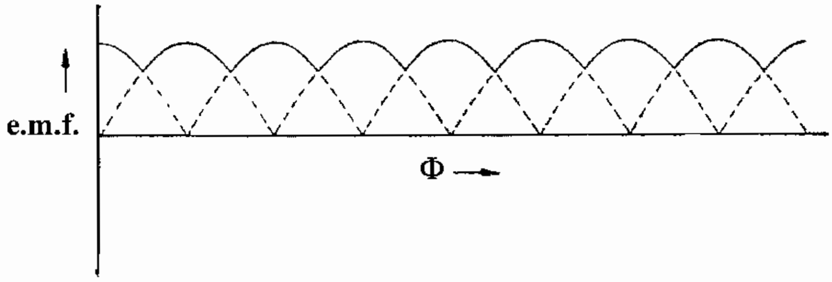

Fig. 9.9.

E.M.F. Equation of D.C. Generator:-

The e.m.f. generated in a direct current generator is proportional to the speed rotation of the armature, total number of armature conductors, total flux available in the field and the type of winding adopted in the armature.

Let, P = No. of poles.

Ø = flux per pole, in webers.

Z = total no. of conductors in the armature (number of slots in the armature x number of conductors per slot).

N = Speed of rotation of armature in r.p.m.

A = No. of parallel paths in armature

Eg = e.m.f. induced in any parallel path is armature.

The EMF Equation of D.C. generator (Eg) = $\frac{\text{Ø}zn}{60} \times \frac{P}{A}$ volts

Where, A = P in case of lap wound generator,

A = 2 in case of wave wound generator.

Types of D.C. Generators:

D.C. Generators are classified according to the manner in which their field windings are connected. The process of giving D.C. voltage to the field winding for producing magnetic field is called field excitation. The generators are classified as follows:

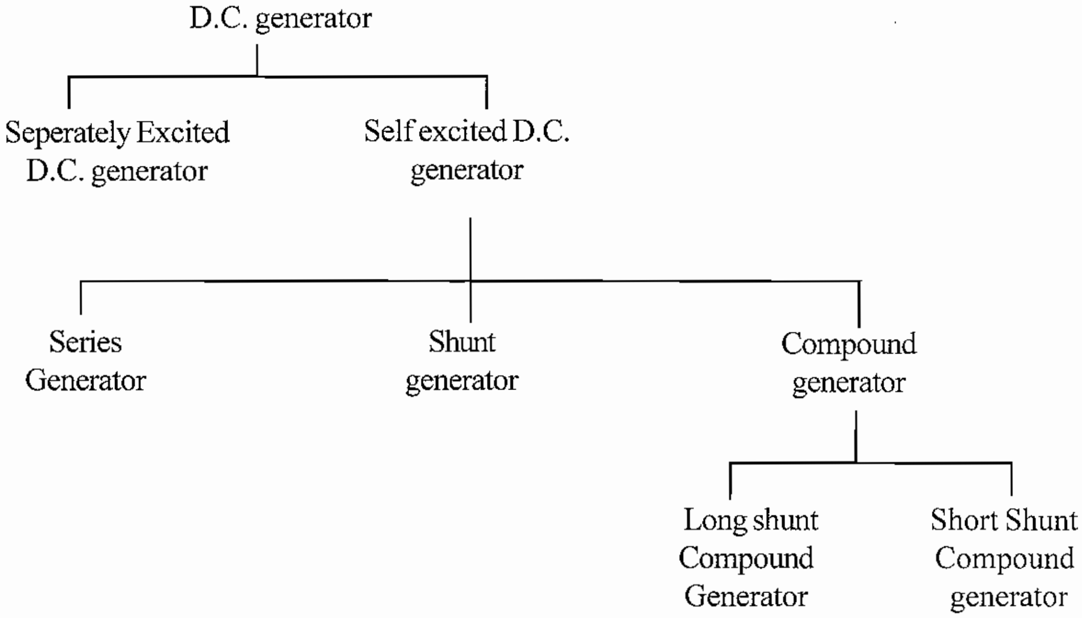

SEPARATELY EXCITED GENERATORS:-

In this type of generator, the field winding is excited by a separate D.C. source. The schematic diagram of a separately excited D.C. generator is shown in figure. 9.10.

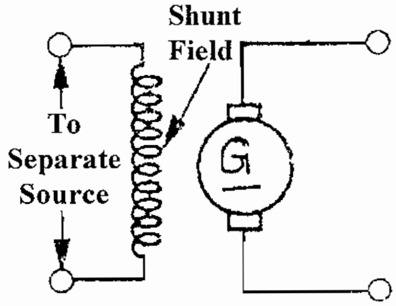

Fig. 9.10 Separately excited generator

SELF EXCITED GENERATORS:-

In this type of generator, the field winding is excited by the same machine. When the armature is rotated some e.m.f. is generated due to the presence of residual magnetism. Thus some induced currents is produced and this passes through the field coils. This induced current produce more flux. This action is repeated and thereby sufficient current passes through the field coils to generate the rated induced EMF.

The self excited generators are further classified in to three types, according to the way of their field winding connections to the armature as follows:

1. Shunt wound generator.
2. Series wound generator. And
3. Compound wound generator.

SHUNT WOUND GENERATOR:-

In this type of generator, the field winding is connected in paralled with the armature terminals. The shunt field windings consists of a large number of turns of thin copper wire. Since the field winding is connected in parallel, the voltage generated is applied across the terminals. The schematic diagram of a shunt generator is shown in figure. 9.11.

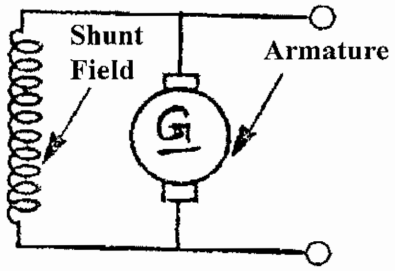

Fig. 9.11 Shunt generator

SERIES WOUND GENERATOR:-

In this type of generator the field winding is connected in series with the armature. The field winding consists of a few number of turns of thick copper wire because it has to carry full load armature current. The schematic diagram of a series generator is shown in figure. 9.12.

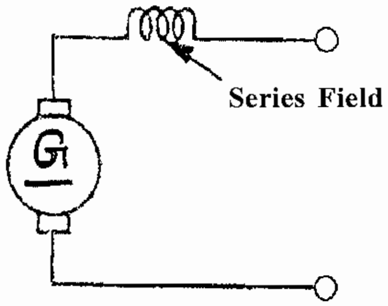

Fig. 9.12. Series generator

COMPOUND WOUND GENERATOR:-

Short Shunt connection Long – Shunt connection.

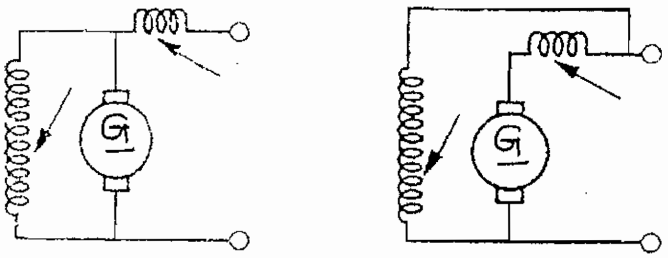

Fig. 9.13 Compound generator

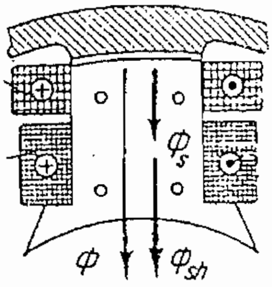

Fig. 9.14 Main pole of a compound wound machine

In the compound wound generator, the shunt field winding and series field winding connected with the armature terminals. Depending up on the shunt field and series field winding connections, it is named as long shunt or short shunt generator. The schematic diagram of D.C. compound generator is shown in figure. 9.13. In compound generator, the shunt field winding and the series field winding are placed in the main poles as shown in figure. 9.14.

Armature Reaction:

In D.C. generators, under looked condition, the armature conductors carry current and produce a magnetic field. The effect of this magnetic field set up by the armature current on the distribution of the flux under main poles is known as armature reaction.

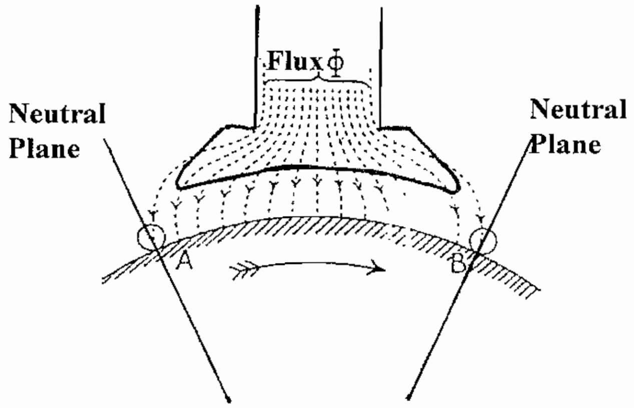

Fig. 9.15

In d.c. machines the brushes are placed along the geometrical neutral axis (GNA). The magnetic neutral axis (MNA) is also the same. The geometrical neutral axis is the line which bisects the angle between the two adjacent poles. Along the magnetic neutral axis, the flux exisiting is zero. Hence the EMF induced in the conductors along this axis is zero.

Fig. 9.16 (a1) shows the flux from the field poles through the armature of a bipolar generator when there is no current in the armature conductors. This flux is produced entirely due to the ampere turns of the field windings. Moreover it is distributed symmetrically with respect to the polar axis, that is the centre line of the N and the S poles. The fig. 9.16 (a2) shows a vector F which represents in magnitude and direction of MMF producing this flux. This vector F is acting a right angle to the neutral plan.

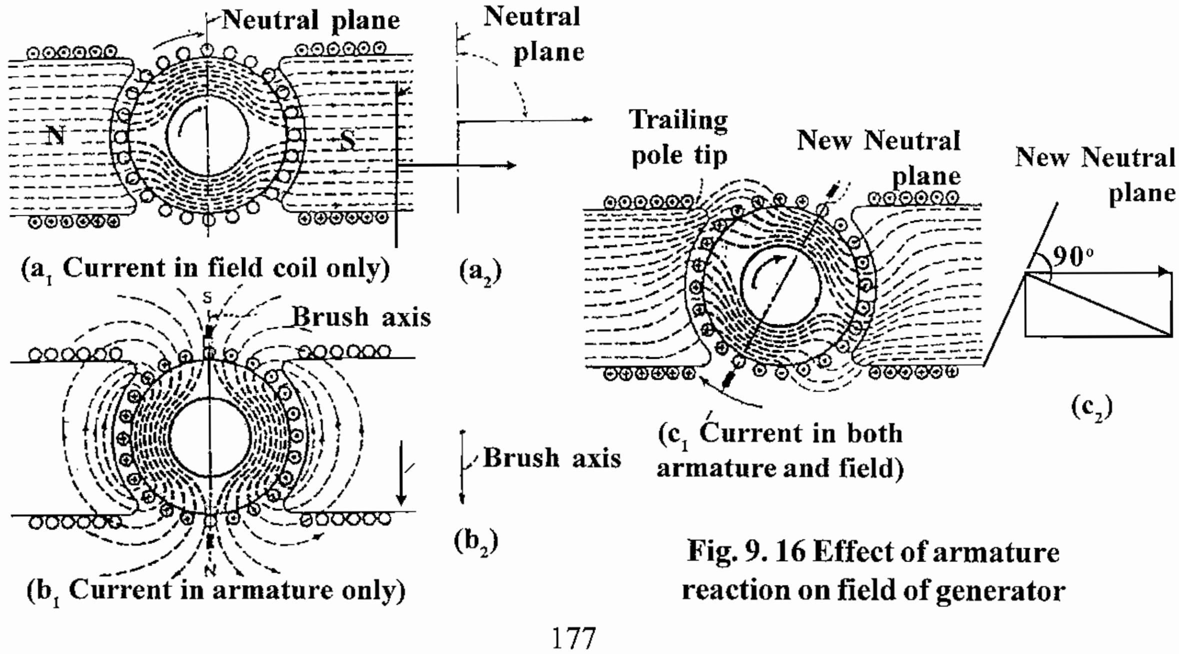

Fig. 9. 16 Effect of armature reaction on field of generator

In fig. 9. 16 (b1). There is no current in the field coils, but the armature conductors are shown as carrying current. The direction of the current in the armature conductors are shown as if it is loaded. The direction of current in all the conductors is the same that lie under one pole. The direction of the current is away from the viewer on the left side of the armature. This current direction may be checked by fleming's right hand rule.

The M.M.F. due to these current carrying conductors combine to send the flux downwards through the armature, as shown in the diagram b2. (this direction can be determined by cork screw rule). The direction of current in the conductors on the right hand side of the armature is shown as coming towards the viewer. Their MMF's also combine to send the flux downwards through the armature. That is, the MMFs of both sides of the armature combine in such a manner as to send the downwards through the armature. The direction of this flux is perpendicular to the polar axis. The armature MMF is represented in magnitude and direction by the vector F_A in fig. C_2.

Fig. 9. 16 (C1) shows the resultant flux lines obtained when both the field current and the armature current are acting simultaneously, which occurs when the generator is under load. The resultant flux is acting at an angle to the main flux. The effect of armature reaction is shown by a vector F_o in the figure C2. The field MMF vector F and the armature MMF vector F_A act at right angles to each other. The resultant MMF vector is F_o. As the direction of the resultant flux is the same as that of the resultant MMF then the new magnetic neutral axis must be at right angle to F_o. Thus the new magnetic neutral axis advances as shown in fig. 9.16(d).

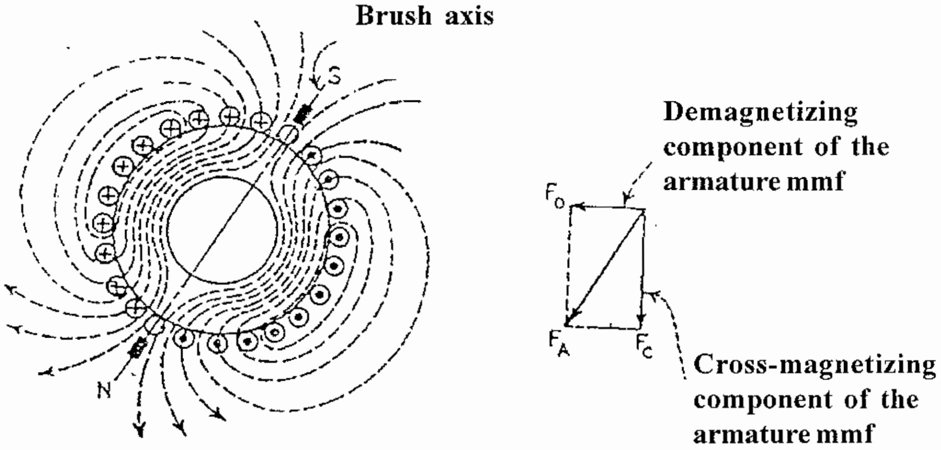

Fig. 9.16 Relation of armature flux to brush axis

Therefore the brushes are also shifted to the new magnetic neutral axis. The armature behaves as tilted coil and hence the armature MMF is also filted along the magnetic neutral axis.

Effect of Armature Reaction:

(1) The flux due to armature current helps (strengthen) the main pole flux on the left handside at trailing pole tips.

(2) The flux due to armature current opposes (demagnetize) the mainpole flux on the righthand side at the leading pole tips. There are shows in fig. 9.16 (c) above.

The armature MMF can be resolved in to two components as

(1) Demagnetising component and

(2) Cross magnetising component

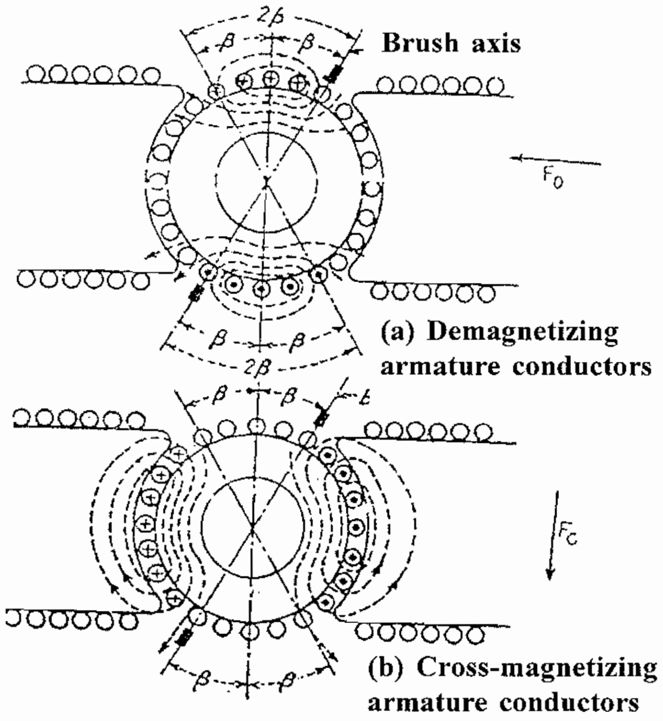

Fig. 9.17

The demagnetising component is in phase opposition to the field MMF. This reduces the main field flux.

The cross magnetising component is at right angles to the field MMF. This changes the direction of the main field flues. The exact conductors which produce these two effects are shown in figure. 9.17 Due to the effect of these two components of the armature MMF, the resultant MMF has increased (Fig. 9.18).

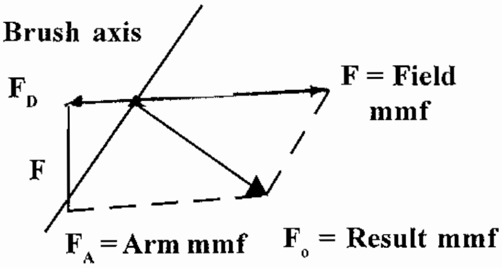

Fig. 9.18

Methods of Compensating Armature Reaction:-

(i) Increasing the Air Gap Length.

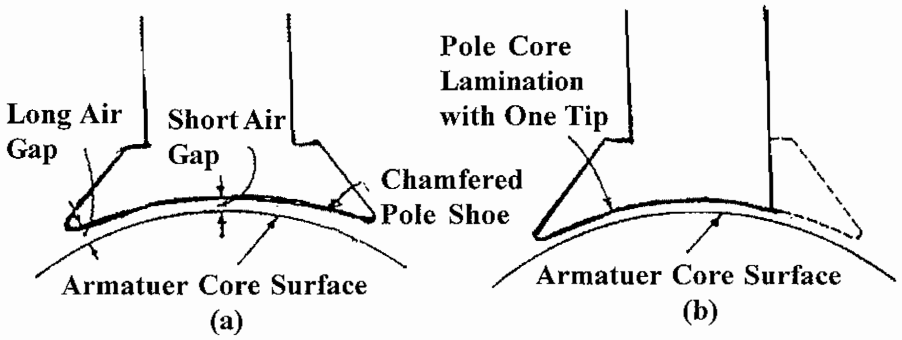

Fig. 9.19 Special pole-core laminations to counteract the effect of armature reaction

In small machines the air gap length is increased (for increasing the reluctance to the armature flux). This increases the ratio of the pole MMF to armature MMF. Thus the effect armature reaction is reduced.

The reluctance between the pole tips and the surface of the armature core is increased in two ways. This reduces the armature reaction flux in the interpole zone. Fig. 9.19. Shows how this is done by using chamfored pole shoes and by employing pole laminations at one side of pole tip.

In fig. 9.19. (a) the rounded surface of the pole shoe is not concentric with the circular armature core. This reduces the effectiveness of the armature MMF at the pole tips and in the commutation zone. In fig. 9.19 (b). the same result is accomplished by cutting off one pole tip. In assembling the laminations, the pole tip. In assembling the laminations, the pople tips are alternated from one side to the other in the adjacent poles.

(2) Providing Interpole (Communtating Pole) :

One of the most important developments in he design of D.C. machines is the use of interpoles to reduce the armature reaction. The interpoles are narrow poles placed exactly halfway between the main poles. The exciting windings for these poles are always permanently connected in series with the armature winding. The flux produced in the interpoles is directly proportional to the armature current.

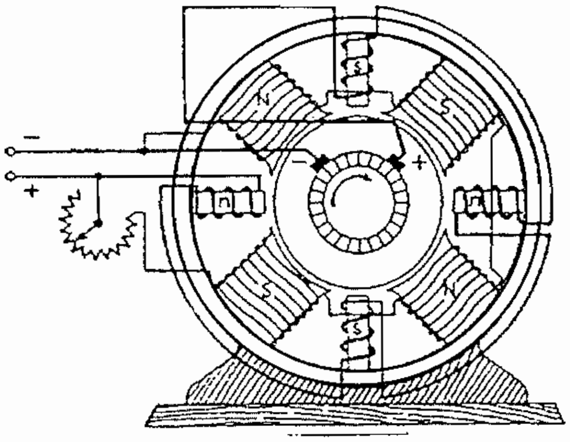

Fig. 9.20 Connections to field pole windings

The connections and the arrangement of commutating poles and their exciting windings of a shunt generator is shown in fig. 9.20.

(3) Providing Compensating Windings

In case of heavy current Machines the armature reaction is neutralized by providing special windings known as compensating windings. These windings are provided in slots made on the mainpole faces. Fig. 9.21. shows such an arrangement of a D.C. generator. These windings are connected in series with the armature winding. They carry the armature current, but in the opposite direction to that of armature conductors. The flux established in these windings neutralises the demagnetising effect of the armature reaction.

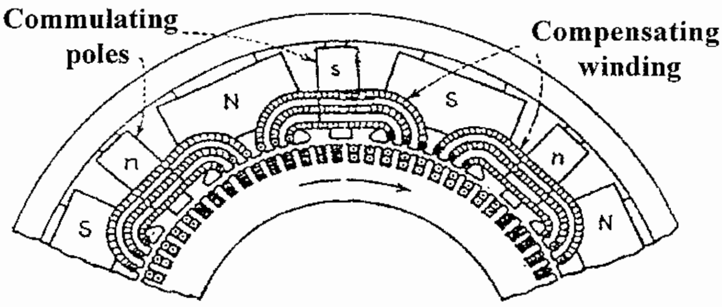

Fig. 9.21. Pole-face winding to compensate armature reaction

Losses in D.C. Machines

- Total losses
  - Coper losses
    - Armature Cu loss
    - Shunt field Cu loss
    - Series field Cu loss
  - Iron losses
    - Hysteresis loss
    - Eddy Current loss
  - Mechanical loss
    - Friction loss
    - Windage loss

Applications of D.C. Generators

D.C. Generators are used only for certain special propose. Sine D.C. generators require regular maintenance and expenditure on replacement of parts such as commutator, brushes etc., the use is limited to the specific purpose only. Nowadays for obtaining D.C., rectifiers are use. The various applications of D.C. generators are as detailed below:-

1. SHUNT GENERATORS

In shunt generators, terminal voltage is more or less constant, so there are used for

(a) Electroplating (b) Battery charging (c) Excitors for AC generators.

2. SERIES GENERATORS

Series generator has a rising characteristic. So it is used as boosters in case of long D.C. feeders to compensate for the voltage drop in them. It is also used for lighting are lamps.

3. COMPOUND GENERATORS

a) Level Compound : Used where reated terminal voltage is required at full load conditions.

b) Over Compound : Used where power is to be transmitted to a long distance. In this case, the voltage at load remains constant.

c) Differential compound : - Used for D.C. welding sets since they have an inherent character to limit the short circuit current.

4. SEPERATELY EXCITED GENERATORS

These generators are used for (1) Supplying D.C. motors whose speed in to be varied widely (2) where a wide range of D.C. voltage is required for testing purpose.

Questions

Part A

choose the correct answer

1. The e.m.f induced in the d.c generator is alternating one and this is converted in to direct e.m.f by

   a. slipring   b. corbon brush

   c. commulator   d. end rings.

2. The direction of induced e.m.f is determined by using

   a. fleming's right hand rule   b. fleming's left hand rule

   c. Kirchoff's law   d. Mutual induction.

3. The Yoke or frame of the d.c machine is made of

   a. Copper   b. Aluminium

   c. Cast iron   d. Bronze

4. Inter poles are provided to

   a. Generate the e.m.f   b. operate in over load.

   c. economical basis   d. improve commutation

5. Armature lamination is about

   a. 1 Cm thick   b. 1 mm thick

   c. 0.5 mm thick   d. 0.5 inch thick

6. Compensating windings are provided in slots made on the

   a. armature   b. mainpole faces

   c. Inter pole faces   d. none of these

7. D.C series generator used are

   a. Boosters in case of long d.c feeders to compensate for the voltage drop.

   b. Electro plating   c. D.C welding set.   d. Battery charging

Part - B

Answer the following questions in one word:

1. What kind of energy is converted in to electrical energy in d.c generator?
2. Write the material used for making field coils.
3. State any one purpose of providing pole shoes in the poles.
4. What is the purpose of providing ventilating ducts in the armature?
5. What is the metal used to built up of commutator segments?
6. What is the name of the process of giving D.C. Voltage to the field winding for producing magnetic field?
7. What is the name of the combined losses of Hysteresis loss and eddy current loss?

Part - C

Answer the following questions in briefly:

1. What are the mainparts of d.c machine?
2. What is the interpole?
3. Write short notes on commutator
4. What is the use of bearing in d.c machine?
5. What are the types of d.c generator?
6. What is known as armature reaction?

Part - D

Answer the following questions in one page level

1. Write the e.m.f equation of the d.c generator.
2. Explain the construction and operatin of

   1. Series generator 2. Shunt generator 3. Compound generator
3. List out the applications of D.C generators

Part - E

Answer the following questions in two page level

1. Explain the constructional details of D.C machine?
2. Explain the armature reaction in the D.C generator?

10. D.C. MOTORS

General Introduction:-

An electric Motor is a machine which converts electrical energy into mechanical energy. Its action is based on the principle that when a current carrying conductor is placed in a magnetic field, it experiences a mechanical force whose direction is given by "Fleming's left-hand Rule".

Constructionally, there is no difference between a DC generator and DC Motor. In fact, the same DC machine can be used interchangeable as a generator or as a motor. When a generator is in operation it is driven mechanically and develops a voltage. This voltage can send a current through a load resistance. When a motor is in operation, it develops torque. This torque can produce mechanical rotation. DC motors are also like generators classified into shunt wound series wound and compound wound motors.

Before going to study the principle of operation of DC motor the fleming's left-hand rule should be thoroughly known.

Fleming's Left-Hand Rule:-

The direction of motion of the conductor can be determined by using fleming's left-hand rule knowing the direction of the magnetic field and the direction of the current in the conductor, the motion of the conductor can be determined.

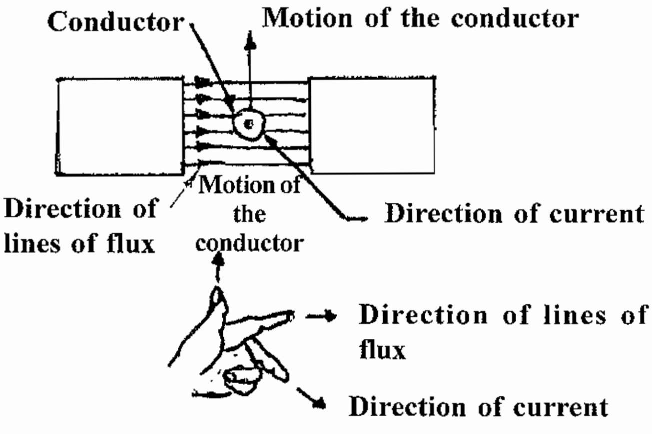

Fig. 10.1.

STATEMENT OF RULE:

Keep the forefingure, middle fingure and thumb of the left hand mutually perpendicular to one another. If the forefingure indicates the direction of the magnetic field and the middle figure indicates the direction of current in the conductor, then the thumb points to the direction of motion of conductor.

PRINCIPLE OF OPERATION OF D.C. MOTOR:-

Fig 10.2(a) shows an uniform magnetic field in which a straight conductor carrying no current is placed. The conductor is perpendicular to the direction of the magnetic field.

In fig. 10.2(b) the conductor is shows as carrying a current away from the viewer, but the field due to the N and S poles has been removed. There is no movement of the conductor during the above two conditions. In fig. 10.2(c) the current carrying conductor is placed in the

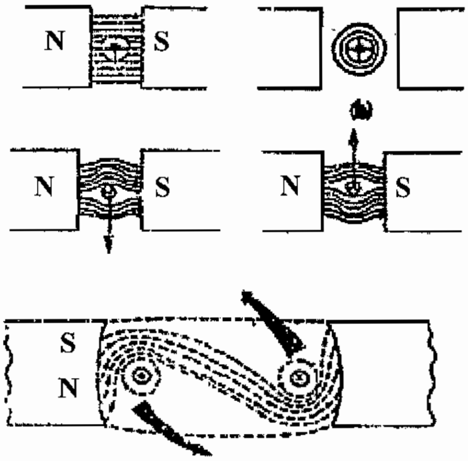

Fig. 10.2 (e)

Magnetic field. The field due to the current in the conductor supports the main field above the conductor, but opposes the main field below the conductor. The result is to increase the flux density in to the region directly above the conductor and to reduce the flux density in the region directly below the conductor It is found that a force acts on the conductor, trying to push the conductor downd-wasels as shown by the arrow. (Refer Fleming's left hand rule).

'If the current in the conductor is reversed, the strengthening of flux lines occurs below the conductor and the conductor will be pushed upwords (Fig. 10.2(d).

Now consider a single turn coil carrying a current as shown in fig. 10.2(e). In view of the reasons given below above the coil side "A" will be forced to move downwards, where as the coil side "B" will be forced to move up wares. The forces acting on the coil sides "A" and "B" will be of same magnitude. But their direction is opposite to one another. As the coil is wound on the armature core which is supported by the bearings, the armature will now rotate. The commutator periodically reverses the direction of current flow through the armature. There fore the armature will have a continuous rotation.

A simplified model of such a motor is shown in fig. 10.3. the conductors are wound over a soft iron core D.C. supply is given to the field poles for producing flux. The conductors are connected to the D.C. supply through brushes.

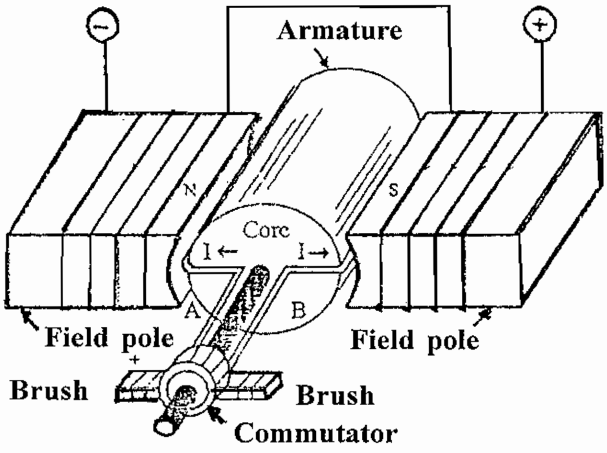

Fig. 10.3. Simplified version of the D.C. Motor

Types of DC. Motors

In the same way as generators DC Motors are also classified into three types, they are

(1) D.C. series motors.

(2) D.C. shunt motors.

(3) D.C. Compound motors.

This classification is based on the field wind connections with the armature. The compound motor can also be classified as long shunt and short shunt compound motors.

D.C. Series Motor

In D.C. series motor, the field winding is connected in series with the armature as shown in Fig. 10.4. The series field winding carries the input current ($I_l=I_a=I_f$) the conductors of the series field winding have large cross sectional area. It has a few number of turns per pole. Because of its large cross sectional area and less number of turns, the series field winding has low resistance.

Let V = Supply voltage

I_l = Ia= armature current

Rse = Resistance of series field   Ra = Resistance of armature.

Eb = back emf induced.

The relationship between V, Eb and Ia is given below

V= Eb + Ia Ra + Ia Rse

V = Eb + Ia (Ra +Rse).

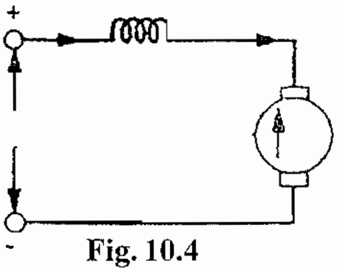

Fig. 10.4

D.C. Shunt Motor

In DC shunt motor, the field winding is connected in panallel with the armature as shown in fig: 10.5. The field windings has a large number of turns and relatively smaller cross sectional area. Since the field current is small the field power loss is also small. The relationship between V, Eb and ia is given below.

V = Eb + IaRa; (Armature current Ia = I_L-I_f).

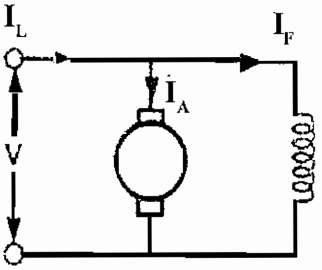

Fig. 10.5

D.C. Compound Motor

In compound motors, both series field and shunt field windings are connected with the armature. The diagram of connections of long-shunt and short-shunt compound motors are shown in fig. 10.6.

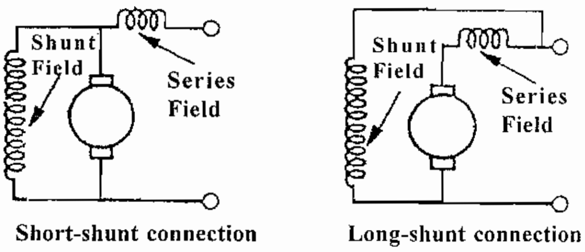

Fig. 10.6. D.C. Compound motor

In long shunt compound motor, the series field winding is connected in series with the armature. But in short shunt compound motor the series field winding is connected in series with the parallel combination of armature and shunt field windings.

Speed control of D.C. Motors:

Different ranges of speeds are required for different applications. A single motor can be used for different speeds for various works. Smooth speed control is possible in D.C. Shunt motor.

The speed of a D.C. motor can be expressed by the equation: Speed, $N \alpha (v - IaRa)/\phi$. Neglecting the small voltage drop IaRa, the speed is directly proportional to the voltage impressed across the armature and inversely proportional to the flux. Hence the speed of a D.C. motor can be controlled by varying the voltage or flux. The above two methods are known as.

1. Armature control and 2. Field control.

These methods are applied to shunt, series and compound motors.

SPEED CONTROL OF D.C. SHUNT MOTOR

Armature Control Method:

This method is used when spends below the no-load speed are required. As the supply voltage across the armature is varied by inserting a variable resistance in series with the armature. Circuit as shown in Fig. 10.7.

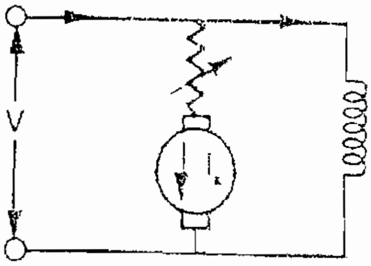

Fig. 10.7

As the controller resistance is increased, the Potential drop across the armature is decreased. So armature speed also decreases. In this method speed can be varied up to the rated speed.

This method is very expensive because the power loss and not suitable for rapidly changing loads. A more suitable operation can be obtained by using a diverter across the armature in addition to armature control resistance as shown in Fig. 10.8. Now the changes in armature current (due to changes in load) will not be so effective in changing the P.D. across the armature.

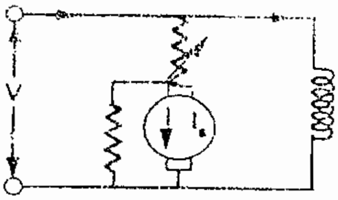

Fig. 10.8

Field Control Method:

It is seen that the speed of a D.C. Motor is inversely proportional to the flux per pole when the armature voltage is kept constant. By increasing the flux, the speed can be decreased and vice versa. The flux per pole of a D.C. motor can be changed b changing the field current. The field current can be changed with the help of shunt field rheostat as shown in fig. 10.9. Since the shunt field current is relatively small, the shunt field rheostat has to carry only

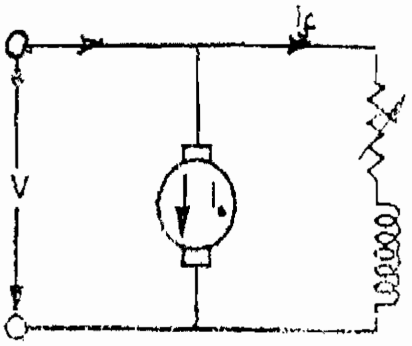

Fig. 10.9

a small amount of current. Therefore the I^2R loss is small as the resistance of the rheostat is less. This method is, therefore, very efficient and is known as flux control or field control method.

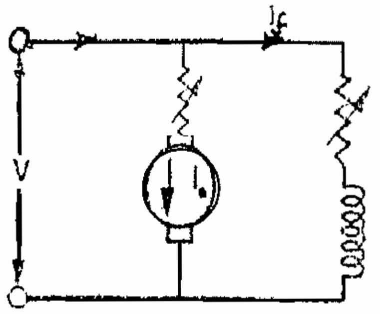

Fig. 10.10.

By this method of speed control we can not have speeds below the rated speed. (Flux can not be increased). But the speed can be increased beyond the rated speed. By combining the field control and armature control methods, it is possible to get speed variations below or above normal speeds. The connection diagram for such a speed control is shown in fig. 10.10. variable resistance are connected in the armature and field circuits.

Ward – Leonard System

This system is used where a very sensitive speed control is required. Examples: Coil winders, electric excavators, papermills etc. The arrangement is illustrated in fig. 10.11.

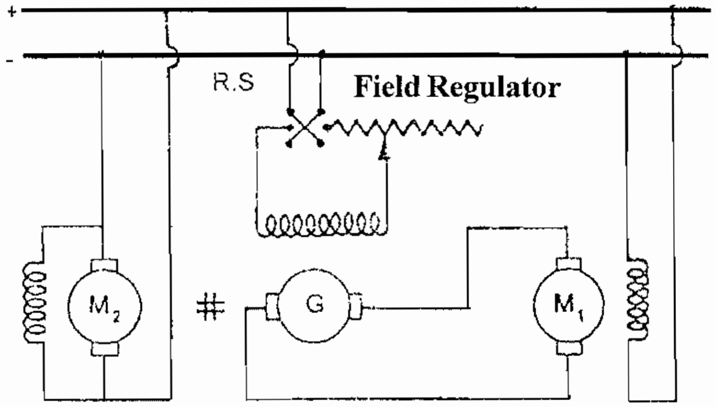

Fig. 10.11. Ward – Leonard system

M_1 is the main motor for which the speed control is required. The field of this motor is permanently connected across the D.C. supply lines. By applying a variable voltage across its armature, any desired speed can be obtained. This variable voltage is supplied by a motor-generator set which consists of either a D.C. or an A.C. motor M_2. The motor M_2 is directly coupled to the generator G.

The motor M_2 runs at an approximately constant speed. The output voltage of "G" is directly fed to the main motor M_1. The voltage of the generator can be varied from zero to its maximum value by means o its field regulator. The field current of the generator can be reversed by the reversing switch Rs. Therefore the generated voltage can be reversed and hence the direction of rotation of M_1 is also reversed.

It should be remembered that motor-generator set always runs in the same direction.

The capital cost of such a system is high, since three machines are employed. But this method is very effective and the speed control obtained is very smooth.

If a vasiable resisance is connected in series with the field circuit of motor M_1. The speed above the rated value can be obtained. The direction of rotation of a D.C. motor can be reversed either by changing in the direction of current through the armature or field winding as shown in fig. 10.12.

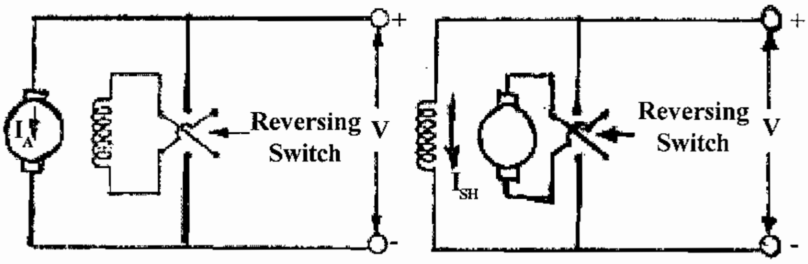

(a) Field reversing (b) Armature reversing

Shunt motor

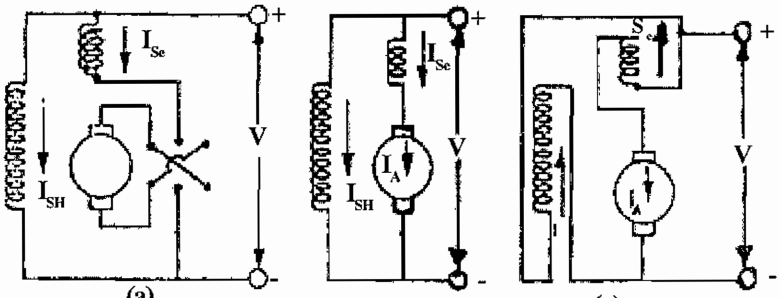

(a) Armature reversing (b) Compound motor (c) Field reversing

Fig. 10.12. Reversing the direction of rotation

SPEED CONTROL OF D.C. SERIES MOTOR:-

Speed of a D.C. series motor can be controlled by the following methods

(1) Field Diverter Method:-

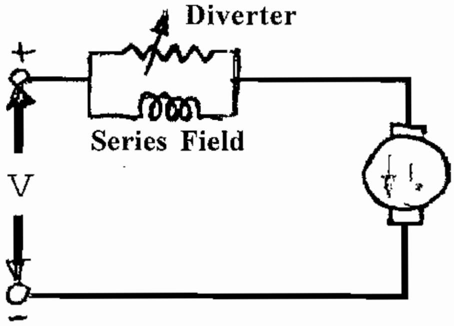

Fig. 10.13

A rheostat called the diverter is connected in parallel with the seriesfield winding as shown in Fig. 10.13. Any desired amount of current can be passed through the diverter by adjusting its resistance.

Hence the flux can be decreased and consequently the speed of the motor is increased. The minimum speed is obtained by completely removing the resistance in the diverter circuit.

(2) Armature Diverter Method:

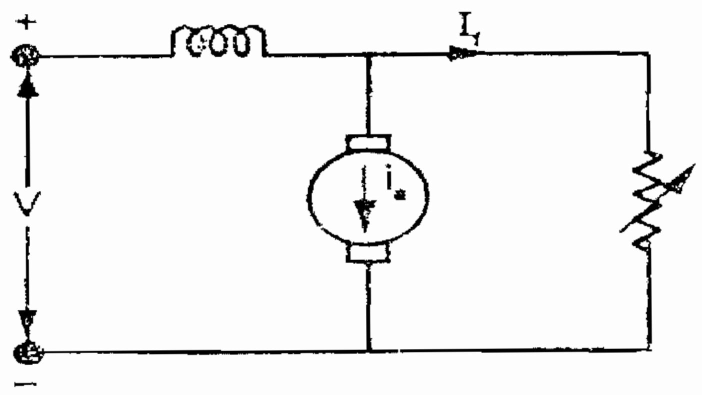

Fig. 10.14

In this method a variable resistance known as diverter is connected in parallel with the armature as shown in fig. 10.14. The armature current can be varied by adjusting the diverter resistance.

For a constant load if Ia is reduced using armature diverter, then the flux Ø has to be increased to produced the same tosque as T αØ Ia. To satisfy this condition, current drawn from the mains will be more to increase the flux. Thus when the flux increases, then the speed increases. The variations in speed can be obtained by varying the diverter resistance.

(3) Tapped Field Control

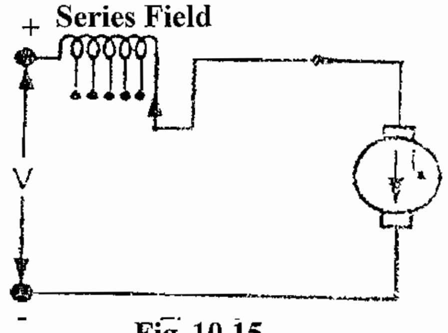

Fig. 10.15

This method is often used in electric traction and is shown in fig. 10.15.

The number of series field turns in the circuit can be changed at our will. With full field winding in the circuit the motor runs at its minimum speed. The speed can be raised in steps by cutting out same of the series turns.

(4) Variable Resistance in series with motor:

By increasing the resistance in series with the armature, the voltage applied across the armature terminals can be decreased. If the voltage across the armature is reduced speed is also reduced. However it will be noted that, when full load current of the motor passes through this resistance, there is a considerable loss of power in it. The circuit diagram for this operation is shown in fig. 10.16.

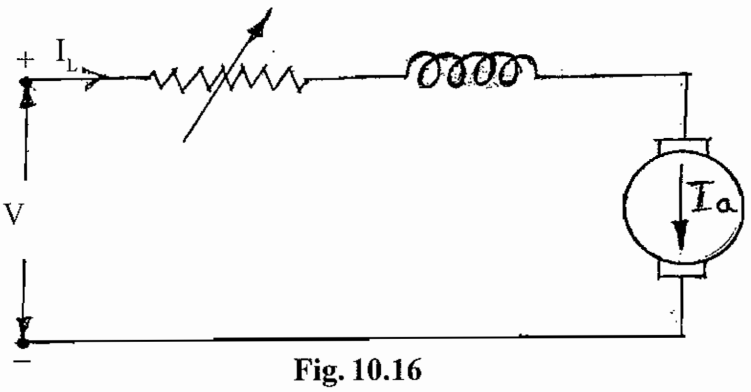

Fig. 10.16

Summary of Applications of D.C Motors:

Type of Motor	Characteristics	Applications
Shunt	Approximately constant speed speed can be controlled. Medium starting torque. (Up to 1.5 full load torque)	For driving constant speed line shafting lathes, centrifugal pumps, machine tools, Blowers and fans, Reciprocating pumps.
Series	Variable speed. Speed can be controlled. High Starting torque.	For traction work. i.e. electric locomotives rapid transit systems trolley cars etc. cranes and hoists conveyors.
Cumulative	Compound Variable speed. Speed can be controlled. High Starting torque.	For intermittent high torque loads, for shears and punches, elevators, conveyors, heavy planners, rolling Mills, ice machines, printing press, air compressors.

Questions

Part - A

Choose the correct answer:

1. The Principle of operation of d.c motor is

   a. Fleming's Rigt hand rule b. Fleming's left hand rule

   c. Ohm's law d. Ampere rule

2. Compound motor can be classified as

   a. Long shunt b. Short shunt c. Long shunt and short shunt d. none of these

3. The series field winding has

   a. Thin conductor b. Thick conductor

   c. Large number of turns d. Thick conductor with less number of turns

4. The shunt field winding has

   a. Smaller cross sectional area with large number of turns.

   b. Higher cross sectional area with small number of turns.

   c. Carrying the full armature current

   d. none of these

5. Speed control of D.C shunt motor in below rated speed by

   a. field control   b. Armature control   c. Tapped field control   d. field and Armature control

6. The motor used for traction work purpose is

   a. Shunt motor   b. series motor   c. Cumulative compound motor   d. Differential motor

Part - B

Answer the following questions in one word:

1. Write the name of the connection of series field winding with armature.
2. Write the name of the connection of shunt field winding with armature.
3. What is the very sensitive speed control system of d.c motor?
4. What method is often used in electric traction of speed control?
5. What type of motor is to be used for driving constant speed?
6. write any one application of cumulative compound motor.

Part - C

Answer the following questions in briefly

1. Give the statement of Rule of fleming's left hand rule.
2. What are the types of d.c motors?
3. What are the applications of d.c series motor?
4. What are the applications of d.c shunt motor?
5. What are the applications of d.c cumulative compound motor?

Part - D

Answer the following questions in one page level:

1. Explain the three types of d.c motors?
2. Explain the speed control of d.c shunt motor by armature control method?
3. Explain the speed control of d.c shunt motor by field control method?

Part - E

Answer the following questions in two page level.

1. Explain the "Ward Leonard" speed control system with neat sketch.
2. Explain the speed control of D.C series motors by

   a. Field diverter method   b. Armature diverter method

   c. Tapped field control method   d. Variable resistance method

11. A.C. GENERATOR (ALTERNATOR)

11.0. Introduction

In power supply system alternating current is supplied to a much greater extent than direct current supply, because of the following advantages.

Advantages of AC Generation:-

(1) AC power can be generated in bulk quantity without much difficulty.

(2) AC requirements are cheaper in cost.

(3) AC voltage can be step up or step down to any level of our requirement.

(4) We can convert in to AC into DC, in case of atmost need for DC supply.

The machine which generates alternating current is called as Alternator (or) Synchronous generator.

11.1. Principle of Alternator

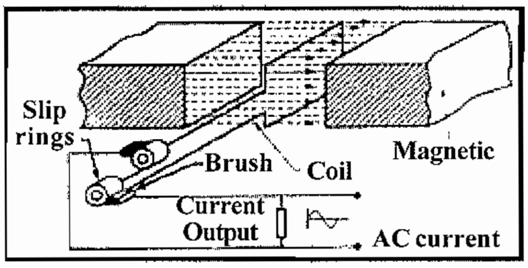

Fig. 11.1.

The alternator works on the principle of "Electromagnetic Induction". According to Faraday's Laws of electro magnetic Induction, when there is a cutting of magnetic flux by a conductor or when there is a change in flux linkage by a coil, an emf is induced in the conductor or coil. Fig. 11.1. shows the simple arrangement of an alternator.

In the fig. 11.1. shown an open ended loop or coil of wire is rotated between the poles of an electromagnet. An e.m.f. is generated in the loop.

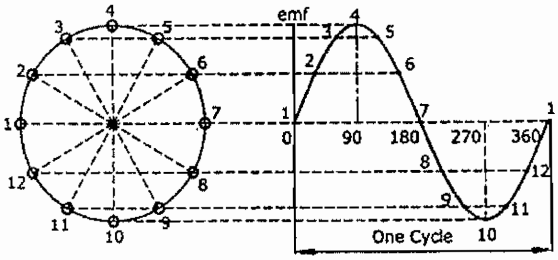

Fig. 11.2.

The value of the e.m.f. varies both in magnitude and direction according to the instantaneous position of the loop. In one revolution of the loop through 360 electrical degrees, the form of the e.m.f. wave is in the shape shown in the fig. 11.2.

In slip rings are fixed to the free ends of the loop, and sliding connections arranged to bear upon than, the alternating e.m.f. will be obtained.

It will produce an alternating current in a closed external circuit. The current will vary in a similar way to the e.m.f. generators.

The complete change of e.m.f. or current from zero to positive maximum back to zero, and through negative maximum to zero is called a "cycle". The no of cycles happening per second is "frequency."

The standard frequency "f" of the public supply is 50 Hertz (Hz) or cycles per second. The practical form of the above machine is known as "Single phase alternator".

11.3. Three Phase Generator

Large scale generation of power is achieved by generating three phase e.m.f.'s using three separate windings insulated from each other. They are placed on the rotor of the alternator. The windings are displaced at an angle of 120° with each other as shown in fig. 11.3. (a). When the rotor is rotated, e.m.f's will be induced in the three coils (Phases).

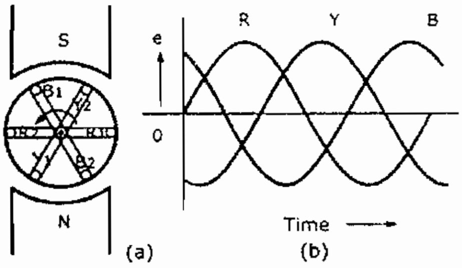

Fig. 11.3.

Voltage induced in the three phases R_1 R_2, Y_1 Y_2 and B_1 B_2 will have a time phase difference of 120° as shown in fig : 11.3 (b). This can be understood by observing that similar rate of change of flux linkage as that of the coil, R_1 R_2 will take place in the coil Y_1 Y_2 after the rotor has rotated by 120° electrical.

The three phase windings are connected in star mode inside the rotor. At least three slip rings are necessary for making connections with external load circuit.

Requirement of Alternator

For the generation of AC emf by the alternator the following basic systems are required.

(1) Magnetic field system to produce the magnetic field.

(2) Armature system which houses the conductors on which emf is be induced.

(3) A prime mover is required which gives necessary rotational power for the generation of emf in the alternator.

11.4. Methods of Generating EMF

In alternator any one of the following methods can be adopted to generate AC emf.

Stationary field and rotating armature type

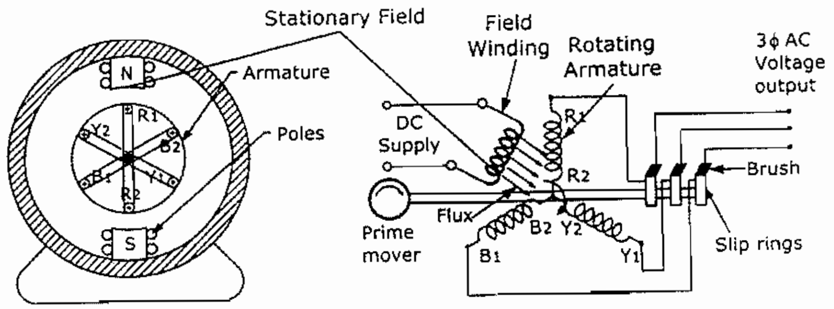

Fig. 11.4.

Ac can be generated in the stationary-field revolving armature. It is commonly used in small sizes and for the lower voltages. The direct current exciting current is supplied to the field windings by fixed connections, while the alternating current is delivered from the slip rings as shown in fig : 11.4. The mechanical construction of the revolving armature alternator is similar to that of the direct current generator, except that there is no commutator.

11.5. Stationary Armature and rotating field type

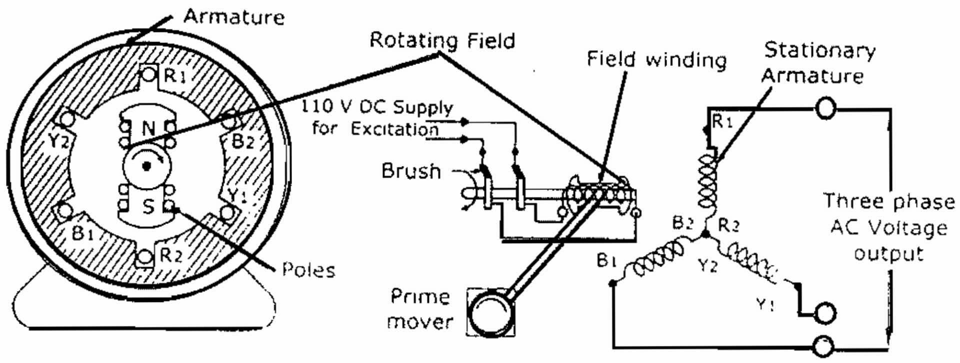

Fig.11.5.

Alternator with the stationary armature revolving field type is invariable used in the generation of high voltages. The main reason for this type is the difficulty of using sliding contact brushes bearing on slip rings at high voltages. With a stationary armature, the power from the generator is delivered through copper to copper connections firmly bolted together. The revolving fields are supplied with direct current normally at 110V, through a pair of slip rings as shown in fig : 11.5.

11.5.1. Advantages of rotating field and stationary armature system

(1) It is easy to insulate the stationary armature winding, because they are placed in the stator.

(2) Out put current can be easily collected and supplied to the load circuit from the fixed terminals of the stator and not to provide three sliprings and brushes.

(3) To supply DC to the rotating field system, only two sliprings are needed. The voltage is 110V (or) 220V and hence these two sliprings can be easily insulated.

(4) Rotating field is comparatively light in weight and hence it can run at high speed.

(5) In stationary armature, the armature coils can be properly placed in position in such a way to withstand the large forces developed, when any short circuit occurs.

(6) In stationary armature, the winding may be colled more efficiently, because the stator core can be made enough cooling ducts for forced air circulation.

11.6. Construction of Alternators

Alternators are constructed in two types.

(1) Salient pole alternator

(2) Non-salient pole alternator.

Salient Pole Alternator

Salient pole alternator consists of a rotor on which projected poles (Salient pole) are mounted on rotor as shown in Fig: 11.6. these alternations are driven at low speeds by prime movers like wator turbines or diesel engine To generate electricity at 50 Hz, with the rotor rotated at slow speeds, the number of rotor poles required becomes large. It is convenient to build a rotor having large number of poles in projected pole, i.e., salient pole construction. The diameters of such rotors become bigger than their lengths.

Stator

It consists of mainly the armature core formed with laminations of steel alloy (silicon steel) having slots in its inner periphery to house the armature conductors as shown in fig: 11.6.

The armature core in the from of a ring is fitted to a frame which may be of cast iron or welded steel frame which is called stator frame.

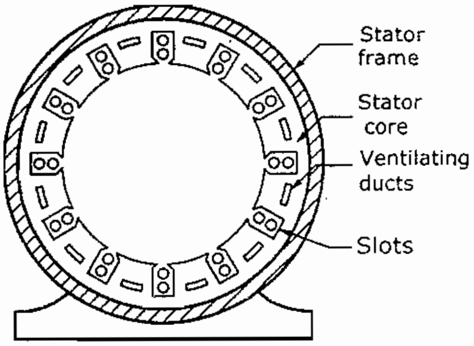

Stator for Smaller Machine

Fig. 11.6.

The armature core is laminated as shown in Fig: 11.8(a) to reduce the eddy current losses which occur in the stator core when subjected to the cutting of the flues produced by the rotating field poles.

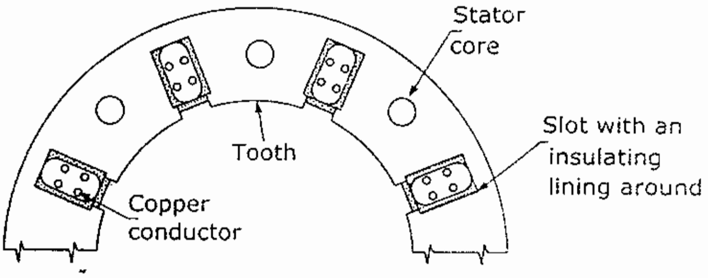

Fig. 11.7.

The laminations are stamped out in complete rings (for smaller machines) or in segments (for larger machines), and insulated from each other with paper or varnish. The stampings also have holes which make axial and radial ventilating ducts to provide efficient cooling. A general view of the stator with the frame is shown in fig: 11.7.

11.8. Armature slots and windings

Slots provided on the stator core are shown in fig: 11.8(a) to house the armature coils are mainly of three types as shown in fig: 11.8.(b).

(i) Open (ii) Semi-closed slots and (iii) closed.

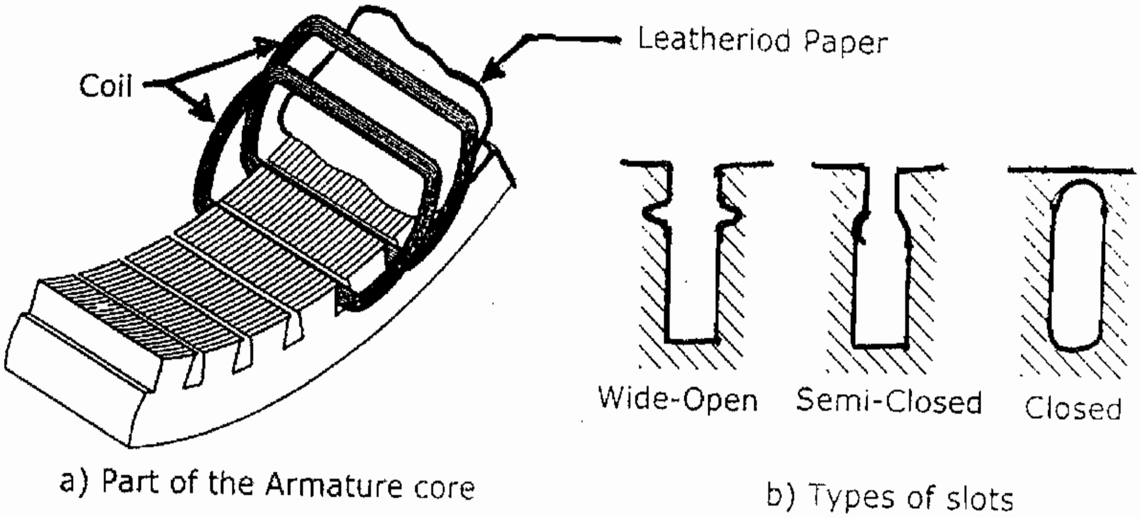

Fig. 11.8.

The open slots are more commonly used because the coils can be form-wound and pre-insultated before placing in the slots resulting in fast work, less expenditure and good insulation. This type of slots also facilitates easy removal and replacement of defective coils. But this type of slots creates uneven distribution of flux, thereby producing ripples in the emf wave. The semiclosed type slots are better in this respect but do not permit the use of formwound coils, thereby complicating the process of winding. Totally closed slots ae rarely used, but when used they used bracing of the winding turns.

11.9. Rotor

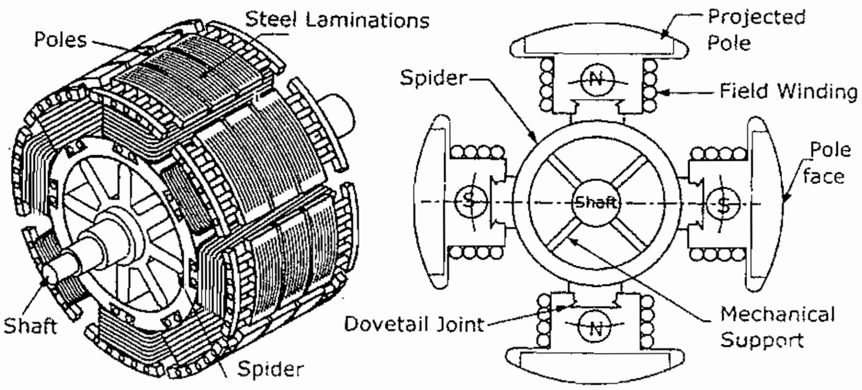

Fig. 11.9.

Fig: 11.9. shows the salient pole type rotor in which the riveted steel laminations are fitted to the shaft fitting with the help of a dovetailed joint. Pole faces are curred to have uniform distribution of the flux in the air gap leading to production of sinusoidal wave form of the generated emf. These pole faces are also provided with slots to carry the damper winding to prevent hunting. Field coils are provided around the pole core to produce necessary field.

The field coils are connected in series in such a way as to produce alternate NORTH and SOUTH poles, and the field winding ends are connected to the slip rings.

- The DC excitation source is connected the brushes which are made to contact the sliprings with the required pressure.
- This type of rotor is used only for the slow and medium speed alternators.
- This type is less expensive and having more space for the field coils and vast heat dissipating area.
- This type is not suitable for high speed alternators as the salient poles create lot of noise while running in addition to the difficulty of obtaining sufficient mechanical strength.
- Salient pole type alternator could be identified by their larger diameter, short axial length and low or medium speed of operation.

Non Salient pole type (or) Turbo Alternator

Another type of alternator is non salient pole type.

11.10. Stator Construction

Stator for the turbo alternator is constructed with smaller diameter and with larger axial length as shown in fig: 11.10. Stator stampings are made of silicon alloy steel sheets, having slots in its inner periphery. Double layer winding is generally adopted for machines with voltage upto 11KV. High voltage machines use semiclosed slots single layer windings. Axial ventilating holes are provided to increase the cooling effect.

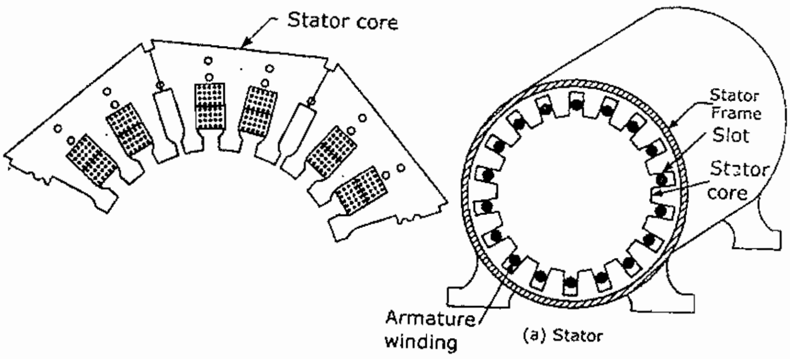

Fig. 11.10.

11.11. Rotor Turbo Alternator – Cylindrical Rotor

This rotor is used in very high speed alternators driven by steam turbines. The rotor of turbo alternator physically is in the form of smooth cylinder having long axial length and smaller diameter.

Poles are not projected out from the surface of the rotor. The outer periphery of the rotor stampings has radial slots.

The field windings is accommodated in these slots. Over certain regions the slots are omitted to either from two or four poles as shown in the Fig. 11.11.

Radial ducts are provided for ventilation Generally copper strips are used for the field winding.

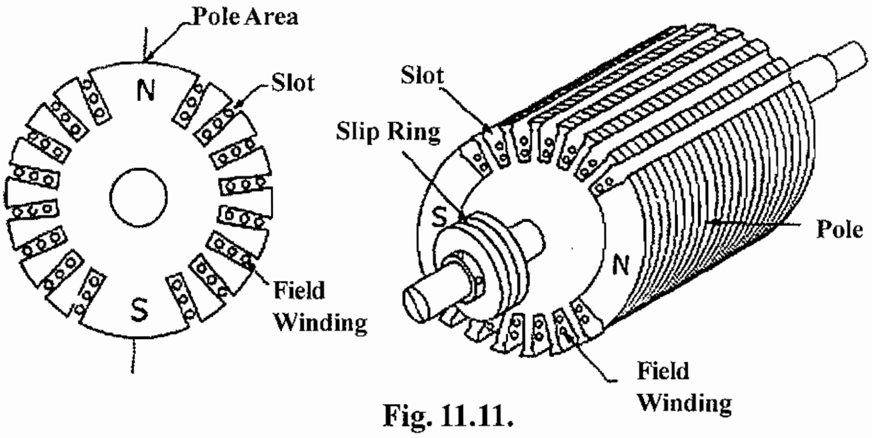

Fig. 11.11.

Comparison of Rotors of Alternator

Sl.No.	Salient Pole Rotor	Cylindrical Rotor
1.	The diameter of stator is large	Small.
2.	Pole are projecting outside	No projection of poles.
3.	Length of stator is short	Length of stator is long
4.	Damper winding is required	No damper winding is required.

5.	Runs at slow speed suitable for hydrogenerators.	Suitable for turbo alternators run by steam turbines.
6.	More windage loss	Less windage loss
7.	No cooling arrangement is necessary	Cooling arrangement is more essential.
8.	Noisy Operation	Noise free operation.

11.12. Parallel Operation of alternators

(1) Alternators in Parallel

It is common practice in these days to connect a number of synchronous generators in parallel instead of single unit to supply a common load. In power stations instead of having one large capacity generator, a number of smaller units are installed for some capacity are connected in parallel.

The fig 11.12 shows the arrangement of a parallel operation of alternators in which they are two generators connected to a common busbar to which the total load of the system is connected. These two generators share that common load according to their excitation and the input power given to them. There are several advantages in adopting parallel operation of alternators.

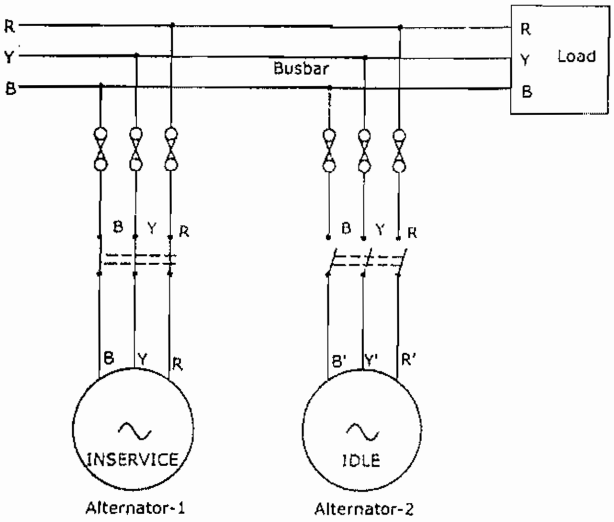

Fig. 11.12.

(2) Advanages of parallel operation of Alternators

The following are the advantages of connecting a large number of synctronous generators in parallel to supply a common lead.

(a) Easy repair and Maintenance:-

Repair and maintenance of individual generating units can be done keeping the continuity of supply by scheduling maintenance of generators one after the other. If only one large generator is installed, supply is to be cut off for carrying out maintenance week.

(b) High Operating Efficiency

For operating an alternator on maximum efficiency it is to be run near to its full load capacity. It is uneconomic to operate large generators on low loads. If several small units are used units can be added or put off depending upon the load requirement and thus the units can be operated at near to their rated capacity.

(c) Saving in capital Cost

Additional sets can be connected in parallel to meet the increasing demand, thereby reducing the initial capital cost of buying larger units in anticipation of increasing demands.

(d) Easy of Manufacturing

There is physical and economic limit to the possible capacity of alternators that can be built. The demand of a single power station may be as high as 1200 MVA, It may not be feasible to build a single alternator of such a high rating due to physical and economic considerations.

(e) Continuous Power Supply

If number of generators are operated in parallel, if one of the generators fails, continuity of supply can be maintained with the help of generators other than faulty one.

(f) Easy Transportation

Generators become in smaller in size hence it is easier to transfer the smaller size generators rather than transporting a single bulky unit.

(3) Synchronisations of Alternator

Before a synchronous generator can be put to share the load, it should be properly connected in parallel with the common bus-bar. Interconnection of the terminals of a generator with the terminals of another or a busbar to which a large number of synchronous generators are already connected is called synchronising.

(4) Conditions for Parallel Operation (or) Synchronisation

For satisfactory parallel connection of two alternators, the following three conditions must be fulfilled.

- The terminal voltage (effective) of the incoming alternators is same as that of existing alternator (or) bus-bar.
- Frequency of the incoming alternator should be equal to the existing alternator (or) bus-bar frequency.
- Phase sequence of the voltage of the incoming alternator should be the same as that of the existing alternator (or) bus-bar.

11.13. Methods of Synchronisation

Synchronisation or parallel connection of alternators can be achieved by any one of the following three methods a) Dark lamp method b) Bright lamp method c) synchroscope method.

a) Dark Lamp method

The fig: 11.13 shows the arrangement of paralleling two alternators by dark lamp method. In this method three lamps as shown in fig. 11.13. can be used for checking the exact conditions suitable for synchronization. Three lamps L_1, L_2 and L_3 are to be connected as shown in the fig: 11.33. with the synchronous generator, driven at a rated speed, if all the lamps glow together and become dark together then the conditions of the incoming alternator are the same as that of the bus-bar.

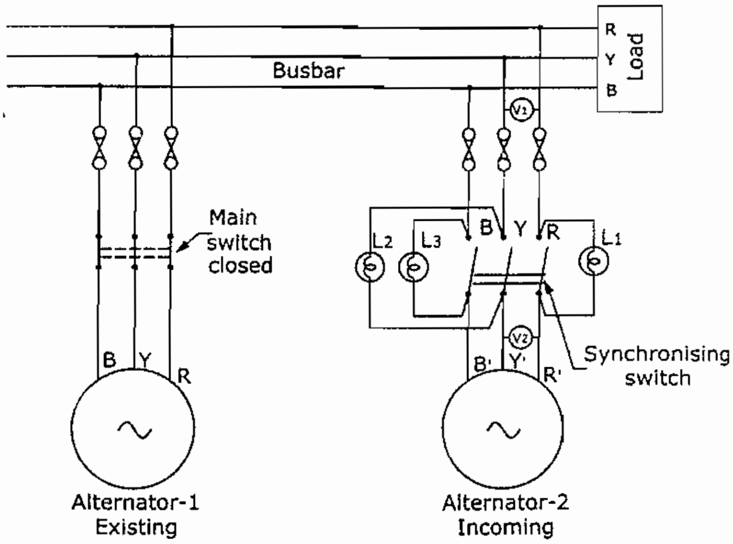

Fig 11.13.

In case if the phase sequence and other conditions are not in exact conditions for paralleling, the following adjustments can be made before paralleling.

- Generated voltage of the incoming alternator can be adjusted by adjusting the field excitation.
- Frequency of the incoming alternator can be controlled are made equal to bus-bar frequency by controlling the speed of the prime mover drving the alternator.
- Phase sequence of the alternator and the bus-bar can be checked by a phase sequence indicator.

Once the three conditions mentioned above are satisfied the three lamps becomes completely dark at one instant. At this instant the incoming alternator can be switched on to the bus-bar. Now the synchronization process is said to be completed.

11.14. b. Bright Lamp Method

In this method of synchronizing an alternator, three lamps are connected as shown in fig: 11.14. Two lamps are cross connected with the bus-bar. In this method the brightness of the lamps will vary in sequence. A particular sequence will indicate if the incoming alternator is running too fast or too slow, Perfect synchronizing will occur when lamp L_1 is dark and lamps L_2 and L_3 are equally bright.

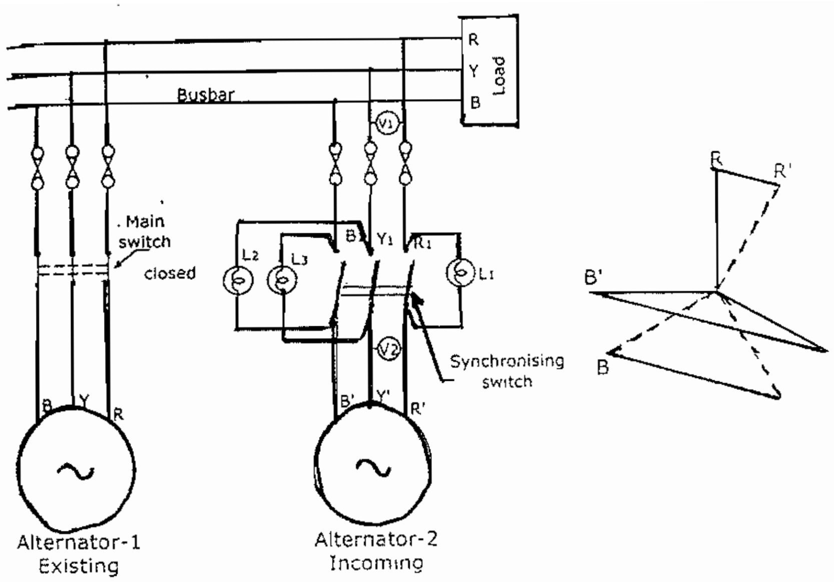

Fig. 11.14.

The speed and voltage have been adjusted to achieve the exact three conditions. The switch of the incoming synchronous machine can be closed only when lamp L_1 is dark while lamps L_2 and L_3 are equal bright If the frequency of the incoming alternator is higher than the bus-bar frequency, the phasor R_2-Y_2-B_2 representing the alternator voltages will be rotating faster than the phasors R_1-Y_1-B_1 representing the bus-bar voltages. At the instant when R_1 is in phase with R_2 lamp L_1 will be dark and the other two lamps will be equally bright.

After one third of the cycle, B_2 will be in phase with Y_2, since the lamp L2 is connected across B2 and Ys, it will be dark. After another one third of a cycle, lamp L3 will be dark. Thus if the frequency of the incoming alternator is higher, the lamps will become dark in the sequence L1-L2-L3. Similar if the frequency of the incoming alternator is lower, the lamps will become dark in the sequence L1-L2-L3. The speed of the alternator will therefore have to be slowly adjusted so that the lamp L1 is dark and lams L2 and L3 are bright. At this instant, the switch can be closed. The incoming machine thus gets connected in parallel with the bus-bar.

In this three lamp method, in addition to knowing the exact instant of closing of synchronizing switch, it is also known whether the incoming alternators frequency is less or more than the bus-bar frequency.

11.15. c. Synchroscope Method

The fig. 11.15 shows the arrangement of the synchroscope method paralleling the alternators. A synchroscope determines the instant of synchronism more accurately than the three lamp method. A synchroscope consists of a rotor (moving coil) and a stator (fixed coil) one of the which is connected to the incoming alternator and the other to the bus-bar as show in fig: 11.15. A pointer connected to the Rotor will rotate if there. Is a difference in frequencies of the incoming alternator and bus-bar.

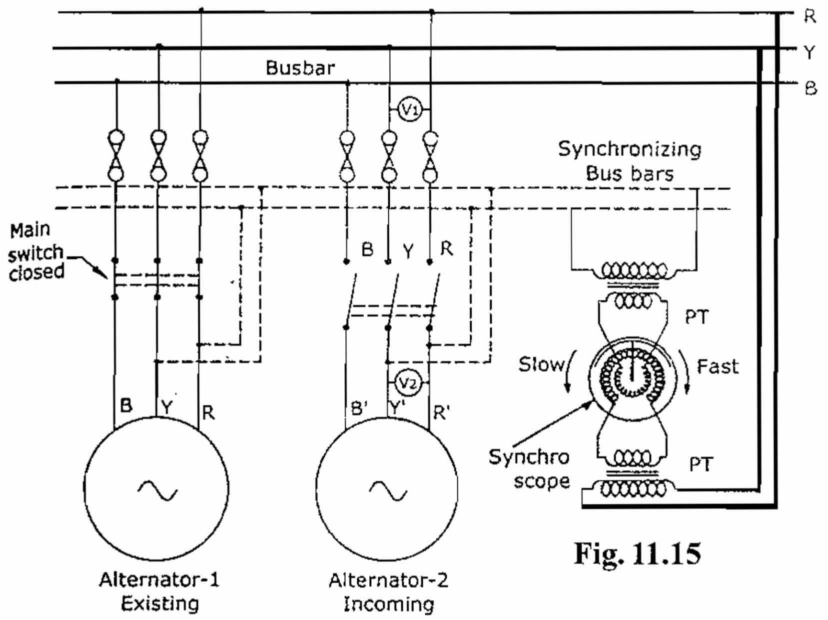

Fig. 11.15

Anticlockwise rotation of the rotor pointer indicates that the frequency of the incoming alternator is slower whereas clockwise rotation of the pointer indicates that the frequency is higher than the bus-bar frequency.

The speed of the prime mover driving the alternator will, therefore, have to be adjusted such that when the frequencies are equal the pointer is stationed at 12'o clock position. The alternator can be switched on to the bus-bar by closing the switch, "S" at this instant.

Questions

Part - A

Choose the correct answer

1. The machine which generators alternating current is called as
   a. Transformer b. Alternator
   c. Synchronous motor d. A.C. Motor

2. The standard frequency of A.C supply is
   a. 50 cycles /min b. 50 cycles /sec
   c. 100 cycles / min d. 60 cycled /sec

3. The sliprings are necessary for making
   a. Connection with external load circuit b. field flu
   c. Ventilation d. Connection with internal winding connection

4. The revolving fields are supplied with direct current normally at
   a. 230 v b. 115 v
   c. 400 v d. 110 v / 220v

5. The weight of the rotating field is
   a. light b. medium
   c. high d. none of these

6. The number of poles is the turbo alternator rotor is

   a. 16 b. 8 c. 6 d. 2 / 4

7. The advantage of parallel operation of alternator is

   a. easy operation b. Production of high voltage

   c. continuous power supply d. to improve the power factor

Part - B

Answer the following questions in one word:

1. What is the basic principle of alternator?
2. What is the phase difference of three phase winding in alternator?
3. How many sliprings are used in rotating field system of alternator.
4. State the two types of the alternator.
5. State the diameter and length of the salient pole alternator.
6. Where the damper winding is provided in the rotation field?
7. Write the rotor name of the high speed alternator.

Part - C

Answer the following questions in briefly:

1. What are the advantages of a.c generation?
2. What are the types of armature slots?
3. What is meant by synchronising of alternators?
4. What are conditions should be followed in parallel operation?
5. Write the methods of synchronisation.

Part - D

Answer the following questions in one page level:

1. Explain the advantages of rotation field and stationary armature system?
2. Compare the salient pole rotor and cylindrical rotor.
3. Explain the advantages of parallel operation of alternators?

Part - E

Answer the following questions in two page level:

1. Explain the construction of salient pole alternator with neat sketch?
2. Explain the three methods of synchronisation with suitable diagram?

12.AC MOTORS

12.0. AC SINGLE PHASE MOTORS

Single phase motors perform a great variety of useful services at home, office, farm, factory and in business establishments. Single phase motors are generally manufactured in fractional HP ratings below 1 HP for economical reasons.

Hence, those motors are generally referred to as fractional horsepower motors with a rating of less than 1 HP. Most single phase motors fall into this category. Single Phase Motors are also manufactured in the range of 1.5, 2, 3 and upto HP as a special requirement.

TYPES OF SINGLE PHASE MOTORS

1. Single phase induction motors:
   - (i) Split phase motors
   - (ii) Capacitor-start, induction-run motors
   - (iii) Capacitor-start, capacitor-rum motors
   - (iv) Shaded pole motors.
2. Single phase Commutator type motors:
   - (i) Repulsion motors
   - (ii) Universal motor.

SINGLE PHASE MOTOR ARE NOT SELF STARTING

A single phase induction motor is similar in construction to that of a polyphase induction motor with difference that its stator has only one winding. If such a stator is supplied with single phase alternating current, the field produced by it changes in magnitude and direction sinusoidally.

Such an alternating filed is equivalent to two fields of equal magnitude rotating in opposite directions at equal speed as explained below:

12.1. DOUBLE FIELD THEORY OF SINGLE PHASE INDUCTION MOTOR

Consider two magnetic fields represented by quantities OA and OB of equal magnitude revolving in opposite directions as shown in fig: 12.1.

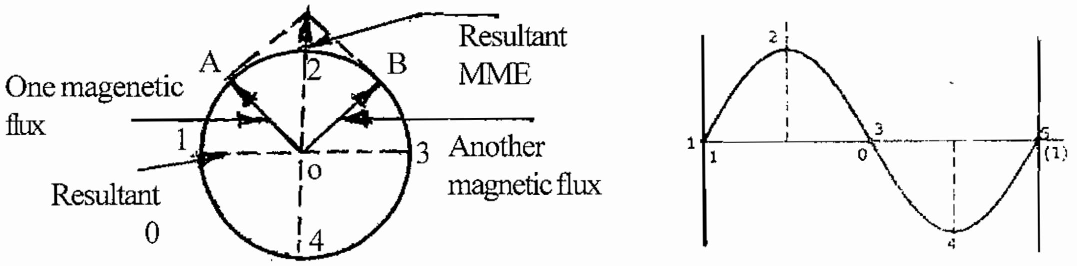

Fig: 12.1

The resultant of the two fields of equal magnitude rotating in opposite directions is alternating. Therefore an alternating current can be considered as having two components which are of equal in magnitude and rotating in opposite directions.

From the above, it is clear that when a single phase alternating current is supplied to the stator of a single phase motor, the field produced will be of alternating in nature which can be divided into two components of equal magnitude one revolving in clockwise and other in counter clockwise direction.

If a stationary squirrel cage rotor is kept in such a field equal forces in opposite direction will act and the rotor will simply vibrate and there will be no rotation.

But if the rotor is given a small jerk in any direction in this condition, it will go on revolving and will develop torque in that particular direction. It is clear from the above that a single phase induction motor when having only one winding is not a self starting. To make it a self starting anyone of the following can be adopted.

(i) By splitting in phase (called as split phase motor).

(ii) By shading the poles (known as shaded pole motor).

12.1.1. PRINCIPLE OF SPLIT PHASE INDUCTION MOTOR

The basic principle of operation of a split phase induction motor is similar to that of a polyphase induction motor. The main difference is that the single phase motor does not produce a rotating magnetic field but produces only a pulsating filed.

Hence, to produce the rotating magnetic field for self starting, phase splitting is to be done to make the motor to work as a two phase motor for starting.

12.1.2. WORKING OF SPLIT PHASE MOTOR

In split phase motor two windings named as main winding and starting winding are provided. At the time of starting, both the main and starting windings should be connected across the supply to produce the rotating magnetic field.

The rotor is of a squirrel cage type and the revolving magnetic filed sweeps part the stationary rotor, inducing emf in the rotor. As the rotor bars are short-circuited, a current flows through them producing a magnetic field.

This magnetic field opposes the revolving magnetic filed and will combine with the main filed to produce a revolving filed. By this action, the rotor starts revolving in the same direction of the rotating magnetic filed as in the case of a squirrel cage induction motor.

Hence, once the rotor starts rotating, the starting winding can be disconnected from the supply by some mechanical means as the rotor and stator fields from a revolving magnetic field. There are several types of split phase motors.

12.2. TYPES OF SPLIT-PHASE INDUCTION MOTORS

1. Resistance-start, induction-run motors

2. Capacitor-start, induction-run motors

3. Capacitor-start, capacitor-run motors

4. Shaded pole motors.

1. RESISTANCE-START, INDUCTION-RUN MOTORS

As the starting torque of this type of motor is relatively small and its starting current is high, these motors are most commonly used for rating upto 0.5 HP where the load could be started easily. The essential parts are shown in Fig: 12.2.

- Main winding or running winding.
- Auxiliary winding or starting winding
- Squirrel cage type rotor.
- Centrifugal switch.

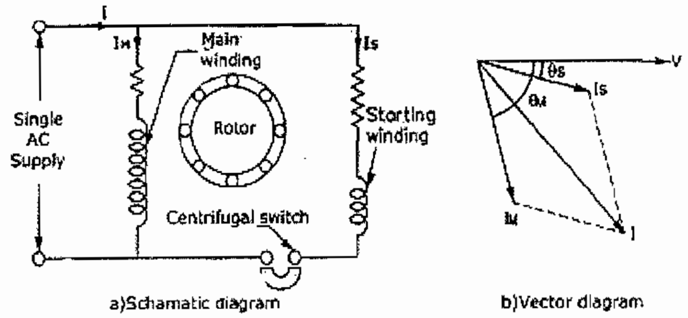

(a) (b)

Fig: 12.2

The starting winding is designed to have a higher resistance and lower reactance than the main winding. This is achieved by using small conductors in the auxiliary winding than in the main winding. The main winding will have higher inductance when surrounded by more iron, which could be made possible by placing it deeper into the stator slots, it is obvious that the current would split as shown in Fig: 12.2(b).

The starting current "I" start will lag the main supply voltage "V" line by 15 degree and the main winding current. "I" main lags the main voltage by about 80 degree. Therefore, these currents will differ in time phase and their magnetic fields will combine to produce a rotating magnetic field.

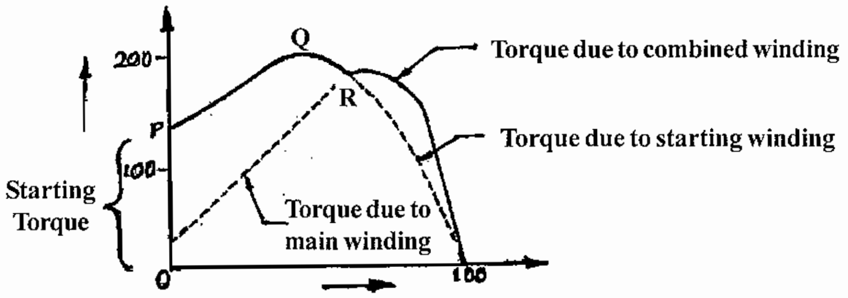

Fig:12.3

When the motor has come upto about 75 to 80% of synchronous speed, the starting winding is opened by a centrifugal switch and the motor will continue to operate as a single phase motor.

At the point where the starting winding is disconnected, the motor develops nearly as much torque with the main winding alone as with both windings connected. This can be observed from, the typical torque-speed characteristics of this motor, as shown in Fig:12.3.

The direction of rotating of a split-phase motor is determined by the way the main and auxiliary windings are connected. Hence, either by changing the main winding terminals or by changing the starting winding terminals, the reversal of direction of rotating could be obtained.

APPLICATIONS

These motors are used for driving fans, grinders, washing machines, and wood working tools.

12.4. CAPACITOR-START, INDUCTION-RUN MOTOR

A drive which requires a large starting torque may be fitted with a capacitor-start, induction-run motor as it has excellence starting torque as compared to the resistance-start, induction-run motor.

CONSTRUCTION AND WORKING

Fig:12.4(a) shows the schematic diagram of a capacitor-start, induction-run motor. As shown, the main winding is directly connected across the main supply whereas the starting winding is connected across the main supply through a capacitor and centrifugal switch.

Both these windings are placed in a stator slot at 90 degree electrical apart, and a squirrel cage type rotor is used.

As shown in Fig:12.4(b), at the time of starting the current in the main winding lags the supply voltages by 90 degrees, depending upon its inductance and resistance. On the other hand, the current in the starting winding due to its capacitor will lead the applied voltage, by say 20 degrees.

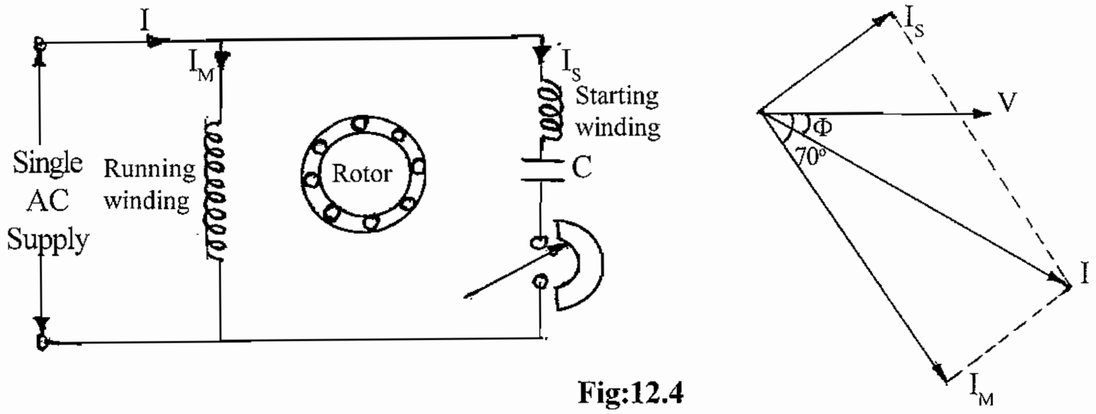

Fig:12.4

Hence, the phase difference between the main and starting winding becomes near to 90 degrees. This in turn makes the line current to be more or less in phase with its applied voltage, making the power factor to be high, thereby creating an excellent starting torque.

However, after attaining 75% of the rated speed, the centrifugal switch operates opening the starting winding and the motor then operates as an induction motor, with only the main winding connected to the supply.

CHARACTERISTICS

As shown in Fig:12.5, the displacement of current in the main and starting winding is about 80/90 degrees, and the power factor angle between the applied voltage and line current is very small.

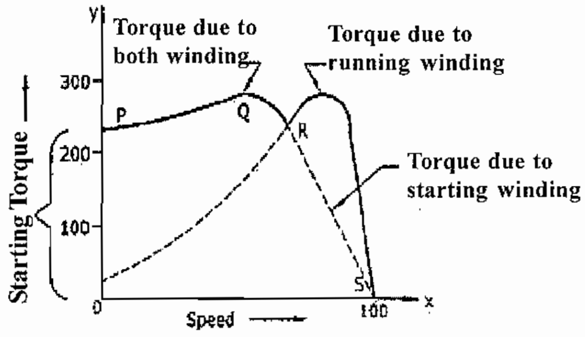

Fig:12.5

This results in producing a high power factor and an excellent starting torque, several times higher than the normal running torque as shown in Fig:12.5.

REVERSING THE DIRECTION OF ROTATION

In order to reverse the direction of rotation of the capacitor-start, induction-run motor, either the starting or the main winding terminals should be changed.

This is due to the fact that the direction of rotation depends upon the instantaneous polarities of the main field flux and the flux produced by the starting winding. Therefore, reversing the polarity of one of the field will reverse the torque.

APPLICATION

Due to the excellent starting torque and easy direction-reversal characteristics,

1. Used in belted fans,
2. Used in blowers dryers,
3. Used in washing machines,
4. Used in pumps and compressors.

12.6.CAPACITOR-START, CAPACITOR-RUN MOTORS

As discussed earlier, one capacitor-start, induction-run motors have excellent starting torque, say about 300% of the full load torque and their power factor during starting in high.

However, their running torque is not good, and their power factor, while running is low. They also have lesser efficiency and cannot take overloads.

These problems are eliminated by the use of a two valve capacitor motor in which one large capacitor of electrolytic (short duty) type is used for starting whereas a smaller capacitor of oil filled (continuous duty) type is used for running, by connecting them with the starting winding as shown in Fig:12.6. A general view of such a two valve capacitor motor is shown in Fig: 12.6.

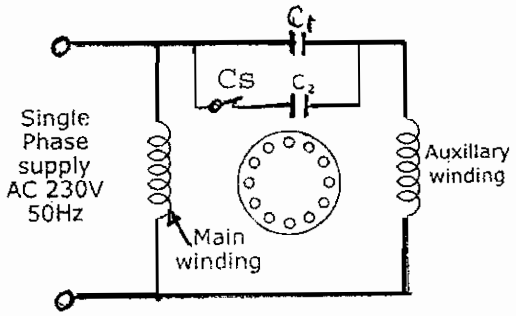

Fig:12.6

This motor also works in the same way as a capacitor-start, induction-run motor, with exception, that the capacitor C1 is always in the circuit, altering the running performance to a great extent.

The starting capacitor which is of short duty rating will be disconnected from the starting winding with the help of a centrifugal switch, when the starting speed attains about 75% of the rated speed.

CHARACTERISTICS

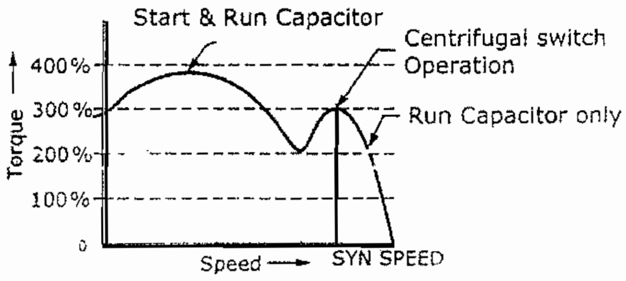

Fig:12.7

The torque-speed characteristics of this motor is shown in Fig:12.7. This motor has the following advantages:

- The starting torque is 300% of the full load torque
- The starting current is low, say 2 to 3 times of the running current.
- Starting and running power factor are good.
- Highly efficient running.
- Extremely noiseless operation.
- Can be loaded upto 125% of the full load capacity.

APPLICATION

- Used for compressors, refrigerators, air-conditioners, etc.
- Higher starting torque.
- High efficiency, higher power factor and overloading.
- Costlier than the capacitor-start – Induction run motors of the same capacity.

12.8.SHAPED POLE MOTOR

The motor consists of a yoke to which salient poles are fitted as shown in Fig:12.8(a) and it has a squirrel cage type rotor.

CONSTRUCTION OF A SHADED POLE

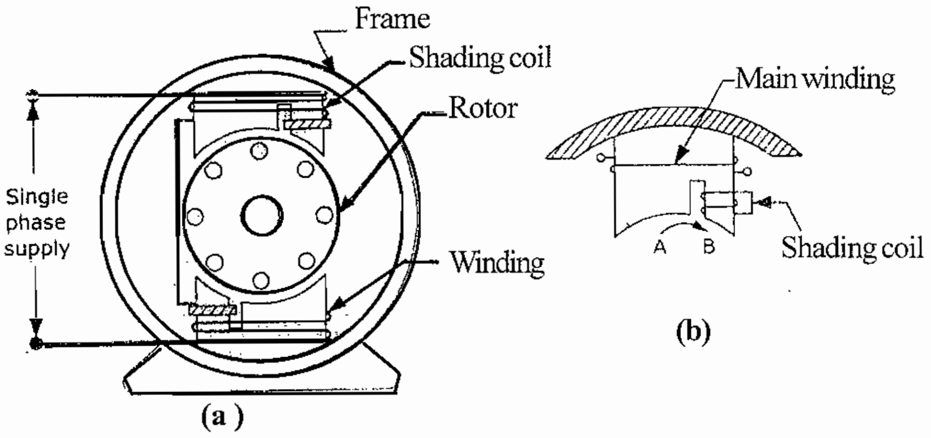

Fig:12.8

A shaded pole made of laminated sheets has a slot cut across the lamination at about one third the distance from the edge of the pole.

Around the smaller portion of the pole, a short-circuited copper ring is placed which is called the shading coil, and this part of the pole is known as the shaded part of the pole. The remaining part of the pole is called the unshaded part which is clearly shown in Fig:12.8(b).

Around the poles, exciting coils are placed to which an AC supply is connected. When AC supply is effected to the exciting coil, the magnetic axis shifts from the unshaded part of the pole to the shaded part as will be explained in details in the next paragraph. This shifting of axis is equivalent to the physical movement of the pole.

This magnetic axis, which is moving, cuts the rotor conductors and hence, a rotational torque is developed in the rotor.

By this torque the rotor starts rotating in the direction of the shifting of the magnetic axis that is from the unshaded part to the shaded part.

SHIFTING OF THE MAGNETIC FLUX

As the shaded coil is of thick copper, it will have very low resistance but as it is embedded in the iron case, it will have high inductance. When the exciting winding is connected to an AC supply, a sine wave current passes through it.

Let us consider the positive half cycle of the AC current as shown in Fig:12.9.

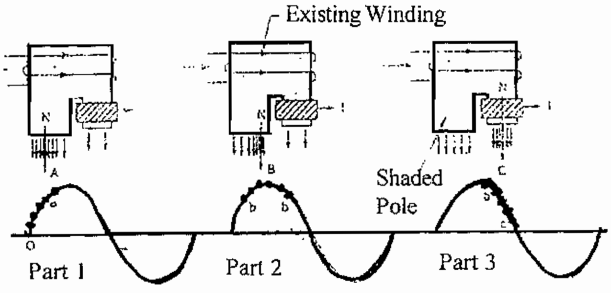

Fig:12.9.

When the current raises from "Zero" Value of point "O" to a point "a" the change in current is very rapid (Fast). Hence, it reduces an emf in the shaded coil on the basis of Faraday's law of electromagnetic induction.

The induced emf in the shaded coil produces a current which, in turn, produces a flux in accordance with Lenz Law. This induced flux opposes the main flux in the shaded portion and reduces the main flux in that area to a minimum value as shown in Fig:12.9.

This makes the magnetic axis to be in the center of the unshaded portion as shown by the arrow in part of fig:12.9. On the other hand as shown in part 2 of 3 when the current raises from point "a" to point "b" the change in current is slow the induced emf and resulting current in the shading coil is minimum and the main flux is able to pass through the shade portion.

This makes the magnetic axis to be shifted to the center of the whole pole as shown in by the arrow in part 2 of Fig:12.9.

In the next instant, as shown in part 3 of Fig:12.9. When the current falls from "b" to "c" the change in current is fast but the change of current is from maximum to minimum.

Hence a large current is induced in the shading ring which opposes the diminishing main flux, thereby increasing the flux density in the area of the shaded part. This makes the magnetic axis to shift to the right portion of the shaded part as shown by the arrow in part.

From the above explanation it is clear the magnetic axis shifts from the unshaded part to the shaded part which is more or less a physical rotary movement of the poles.

Simple motors of this type cannot be reversed. Specially designed shaded pole motors have been constructed for reversing operations. Two such types:

a. The double set of shading coils method

b. The double set of exciting winding method.

Shaded pole motors are built commercially in very small sizes, varying approximately from 1/250 HP to 1/6 HP. Although such motors are simple in construction and cheap, there are certain disadvantages with these motor as stated below:

- Low starting torque.
- Very little overload capacity.
- Low efficiency.

APPLICATIONS

- Record players
- Fans
- Hair driers.

12.10. COMMUTATOR TYPE SINGLE PHASE MOTORS

This type of motors have a wound rotor with brush and commutator arrangement like a dc armature. Commutator motors consist of two classes, namely, those operating on the principle of repulsion and those operating on the principle of series motor.

1. REPULSON MOTOR

Repulsion motors, though complicated in construction and higher in cost, are still used in certain industries due to their excellent starting torque, low starting current, ability to withstand long spell of starting currents to drive heavy loads and their easy method of reversal of direction.

Now there is a condition that the rotor north pole will be repelled by the main north pole and the rotor south pole is repelled by the main south pole, so that a torque could be developed in the rotor. Now due to the repulsion action between the stator and the rotor poles, the rotor will start rotating in a clockwise direction. As the motor torque is due to repulsion action, this motor is named as repulsion motor.

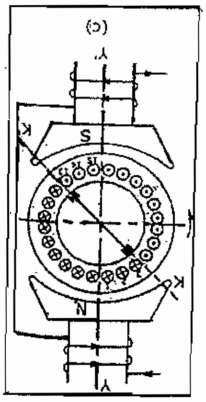

Fig:12.10

DIRECTION OF ROTATION

To change the direction of rotation of this motor, the brush axis needs to be shifted from the right side as shown in Fig:12.11 to the left side of the main axis in a counter clockwise direction as shown in Fig: 12.11.

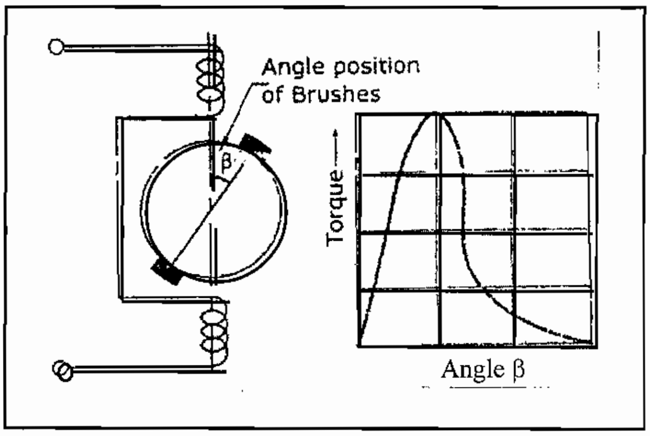

Fig:12.11

CHARACTERISTICS

As explained earlier, the torque developed in a repulsion motor will depend upon the amount of brush shaft as shown in Fig: 12.11, whereas the direction of shift decides the direction of rotation.

Further, the speed also depends upon the amount of brush shift and the magnitude of the load. Relationship between the torque and brush-position angle in a repulsion motor.

Though the starting torque from 250 to 400% of the full load torque, the speed will be dangerously high during light loads.

This is due to the fact that the speed of the repulsion motor does not depend on frequency or number of poles but depends upon the repulsion principle.

Further, there is a tendency of sparking in the brushes at heavy loads, and the PF will be poor at low speeds. Hence the conventional repulsion motor is not much and the other three improved types are popular.

12.12. UNIVERSAL MOTOR (SERIES MOTOR)

It is also commutator type motor. A universal motor is one which operates both on AC and DC supplies. It develops more horsepower per Kg. weight than any other AC motor mainly due to its high speed.

The principle of operation is the same as that of a DC motor. Though a universal motor resembles a DC series motor, it required suitable modification in the construction, winding and brush grade to achieve sparkles commutation and reduced heating when operated on AC supply, due to increased inductance and armature reaction.

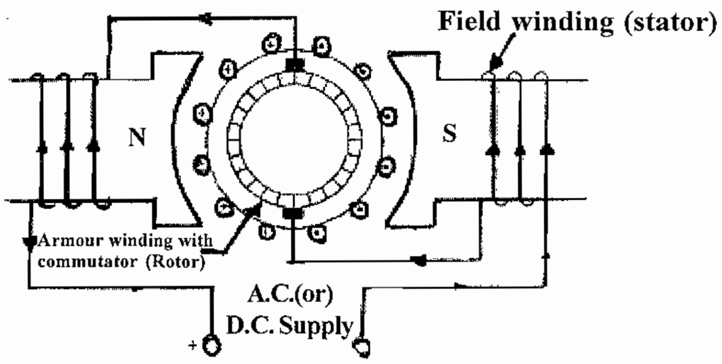

Fig:12.12.

A universal motor could therefore be defined as a series or a compensated series motor designed to operate at approximately the same speed and output at either direct current or single phase alternating current of a frequency not greater than 50HZ, and of approximately the same RMS voltage. Universal motor is also named as AC single phase series motor.

The main parts of a universal motor are an armature, field winding, stator stampings, frame and plates and brushed. The increased sparking at the brush position in AC operation is reduced by the following means:

Providing commutating interpoles in the stator and connecting the interpole winding in series with the armature winding. Providing high contact resistance brushed to reduce sparking at brush positions.

OPERATION

A universal motor works on the same principles as a DC motor i.e. force is created on the armature conductors due to the interaction between the main field flux and the flux created by the current carrying armature conductors. A universal motor develops unidirectional torque regardless of whether it operated on AC or DC supply.

Fig:12.12 shows the operation of a universal motor on AC supply. In AC operation, both field and armature currents change their polarities, at the same time resulting in unidirectional torque.

CHARACTERISTICS AND APPLICATIONS

The speed of a universal motor inversely proportional to the load i.e. speed is low at full load and high, on no load.

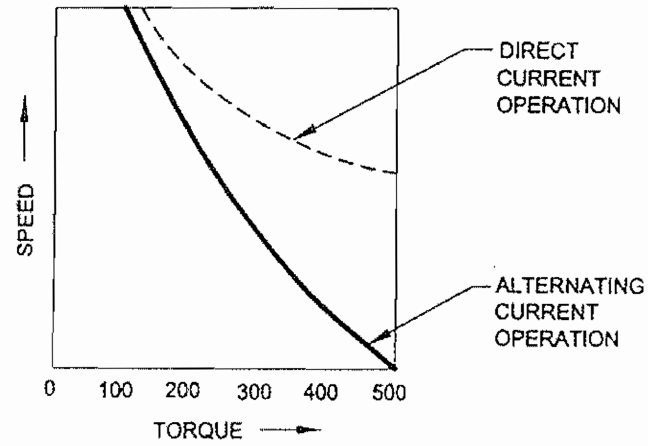

Fig:12.13

The speed reaches a dangerously high value due to low field flux at no loads in fact the no load speed is limited only by its own friction and windage losses. As such these motors are connected with permanent loads or gear trains to avoid running at no load thereby avoiding high speeds.

Fig:12.13 shows the typical torque-speed relation of a universal motor, both for AC and DC operations. This motor develops about 450 % of full load torque at starting, as such higher than any other type of single phase motor. Universal motors are used in vaccum cleaners, food mixers, portable drills and domestic sewage machines.

CHANGE OF ROTATION

Direction of rotation of a universal motor can be reversed by reversing the flow of current through either the armature or the field windings. It is easy to interchange the leads at the brush holders.

However, when the armature terminals are interchanged in a universal motor having compensating winding, care should be taken to interchange the compensating winding also to avoid heavy sparking while running.

12.14. THREE PHASE INDUCTION MOTOR

INTRODUCTION

The most common type of AC motor being used throughout the work today is the "Induction Motor". Applications of three-phase induction motors of size varying from half a kilowatt to thousands of kilowatts are numerous. They are found everywhere from a small workshop to a large manufacturing industry.

The advantages of three-phase AC induction motor are listed below:

- Simple design
- Rugged construction
- Reliable operation
- Low initial cost
- Easy operation and simple maintenance
- Simple control gear for starting and speed control
- High efficiency.

Induction motor is originated in the year 1891 with crude construction. Then an improved construction with distributed stator windings and a cage rotor was built.

The slipring rotor was developed after a decade or so. Since then a lot of improvement has taken place on the design of these two types of induction motors. Lot of research work has been carried out to improve its power factor and to achieve suitable methods of speed control.

PRINCIPLE OF 3 PHASE INDUCTION MOTOR

Induction motor works on the same principle as a DC motor, that is, the current carrying conductors kept in a magnetic field will tend to create a force.

However, the induction motor differs from the DC motor in the fact that the rotor of the induction motor is not electrically connected to the stator, but induces a voltage/current in the rotor by the transformer action, as stator magnetic field sweeps across the rotor.

The induction motor, derives its name from the fact that the current in the rotor is not drawn directly from the supply, but is induced by the relative motion of the rotor conductors and the magnetic field produced by the stator currents.

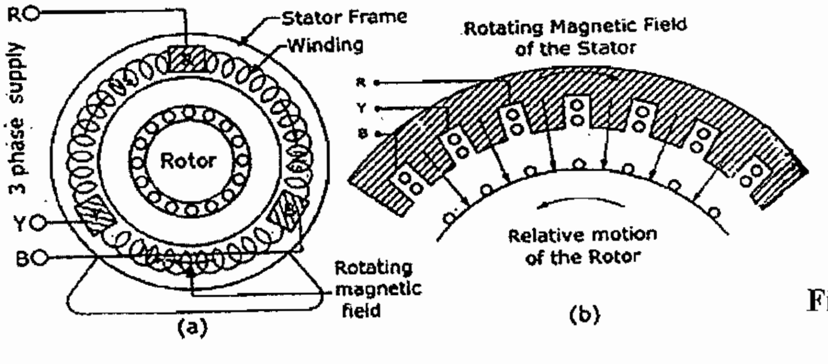

Fig:12.14.

The stator of the three-phase induction motor is similat to that of a 3 phase alternator, a revolving field type. If a three phase supply is connected to the three phase winding in the stator that produces a rotating magnetic field in the stator core. The rotor of the induction motor may have either shorted rotor conductors in the form of a squirrel cage or in the form of a three phase winding to facilitate the circulation of current through a closed circuit.

Let us assume that the stator field of the induction motor is rotating in a clockwise direction as shown in Fig:12.14. This makes for the relative motion of the rotor in an anti-clockwise direction as shown in Fig:12.14(b).

Applying Fleming's right hand rule, the direction of emf induced in the rotor will be towards the observer as shown in Fig:12.15. As the rotor conductors have a closed electric path, due to their shorting a current will flow through them as in a short circuited secondary of a transformer.

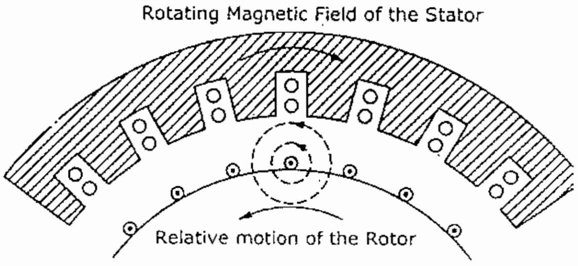

Fig:12.15

The magnetic filed produced by the rotor current will be in counter-clockwise direction as shown in Fig:12.15.

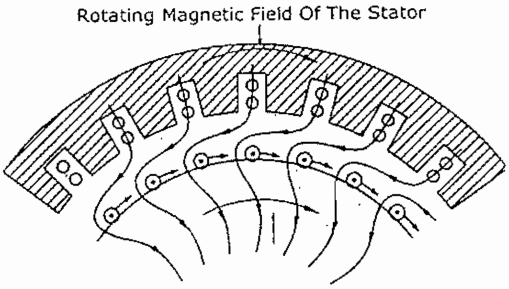

Fig:12.16

Accordingly to Maxwells Corkscrew Rule, the interaction between the stator magnetic field and the rotor magnetic field results in a force to move the rotor in the same direction as that of the rotating magnetic field of the stator as shown in Fig:12.16. As such the rotor follows the stator filed in the same direction by rotating at a speed lesser that the synchronous speed of the stator rotating field.

At higher speeds of the rotor nearing to synchronous speeds, the relative speed between the rotor and the rotating magnetic field of the stator reduces and results in a smaller induced emf in the rotor. Theoretically, if we assume that the rotor attains a speed equal to the synchronous speed of the rotating magnetic field of the stator field and the rotor and thereby no induced emf or current will be there in the rotor.

Consequently, there will not be any torque in the rotor. Hence, the rotor of the induction motor cannot run at a synchronous speed at all. As the motor is loaded, the motor speed has to fall to cope up with the mechanical force, thereby the relative speed increased, and the induced emf and current increases in the rotor resulting in an increased torque.

12.17. ROTATING MAGNETIC FIELD

A rotating magnetic field is that which rotates in space at sybchronous speed, inside an induction motor starter.

ROTATING MAGNETIC FIELD FROM A 3 PHASE STATOR

The operation of the induction motor is dependent on the presence of a rotating magnetic field in the stator. The stator of the induction motor contains 3 phase windings placed at 120 degree electrical apart from each other. These windings are placed on the stator core to form non-salient stator field poles when the stator is energized from the three phase voltage supply each phase winding will step up a pulsating field, however, by virtue of the spacing between the windings and the phase difference the magnetic fields combine to produce a field rotating at a constant speed around the inside surface of the stator core. This resultant movement of the flux is called the "Rotating magnetic field" and its speed is called the "Synchronous speed".

The manner is which the rotating field is set up may be described by considering the direction of the phase currents at successive instants during a cycle.

Fig:12.17 (a) shows a simplified star-connected, three phase stator winding. The winding shown is for a two-pole induction motor. Fig:12.17(b) shows the phase currents for the three phase windings.

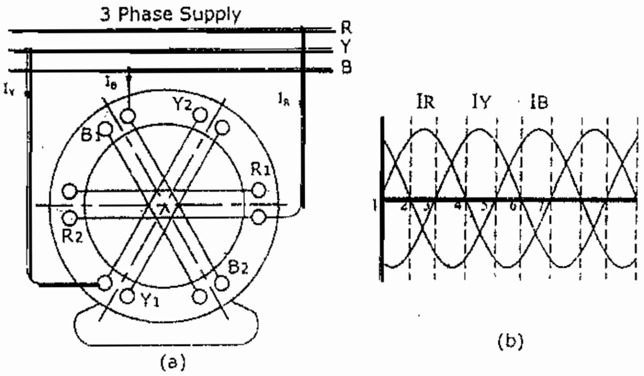

Fig:12.17

The phase currents will be 120 electrical degrees apart as shown in Fig:12.17(b). The resultant magnetic field produced the combined effect of the three currents is shown at increments of 60 degree for the cycle of the current.

12.18. CONSTRUCTIONAL DETAILS OF INDUCTION MOTOR

Three phase induction motors are constructed into two major types:

1. Squirrel cage Induction Motors
2. Slipring Induction Motors.

1. SQUIRREL CAGE MOTOR

(a) Stator Construction

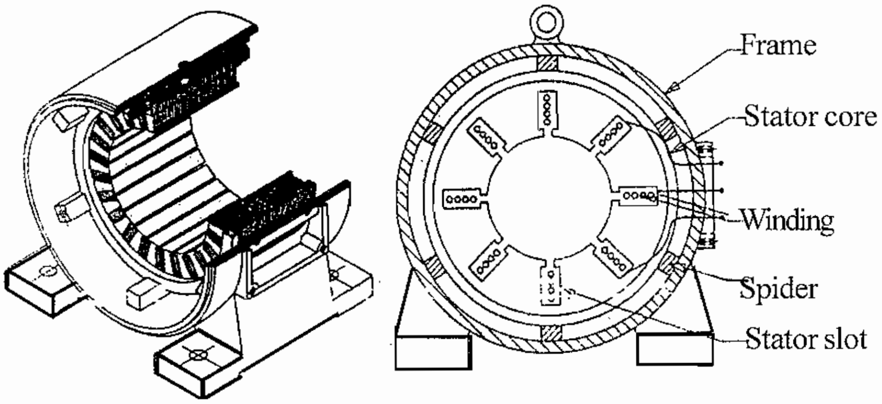

Fig:12.18

The induction motor stator resembles the stator of a revolving field, three phase alternator. The stator or the stationary part consists of three phase winding held in place in the slots of a laminated steel core which is enclosed and supported by a cast iron or a steel frame as shown in Fig:12.18.

The phase windings are placed 120 electrical degrees apart and may be connected in either star or delta externally, for which six leads are brought out to a terminal box mounted on the frame of the motor. When the stator is energized from a three phase voltage it will produce a rotating magnetic field in the stator core.

12.19. (b) Rotor of a squirrel cage induction motor

The rotor of the squirrel cage motor shown in Fig:12.19 contains no windings. Instead it is a cylindrical core constructed of steel laminations with conductor bars mounted parallel to the shaft and embedded near the surface of the rotor core.

These conductor bars are short circuited by an end rings at both end of the rotor core. In large machines, these conductor bars and the end rings are made up of copper with the bars brazed or welded to the end rings shown in Fig:12.19.

In small machines the conductor bars and end rings are sometimes made of aluminium with the bars and rings cast in as part of the rotor core.

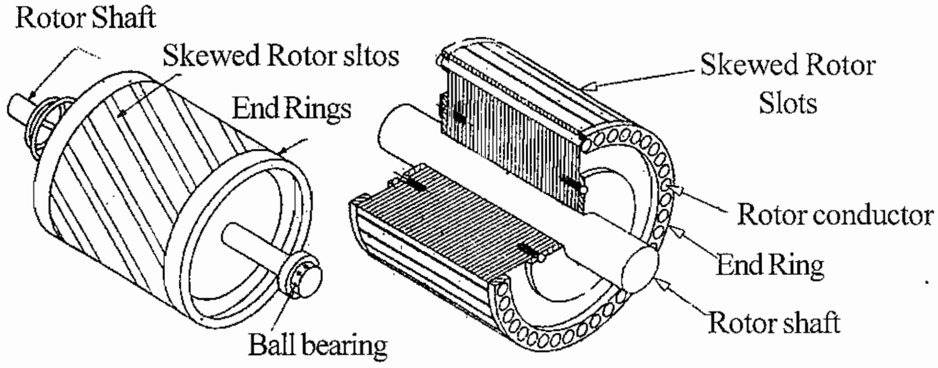

Fig: 12.19

The rotor or rotating part is not connected electrically to the power supply but has voltage induced in it by transformer action from the stator.

For this reason, the stator is sometimes called the primary and the rotor is referred to as the secondary of the motor since the motor operates on the principle of induction and as the construction of the rotor with the bars and end rings resembles a squirrel cage, the squirrel cage induction motor is used.

The rotor bars are not insulated from the rotor core because they are made of metals having less resistance than the core. The induced current will flow mainly in them. Also the rotor bars are usually not quite parallel to the rotor shaft but are mounted in a slightly skewed position. This feature tends to produce a more uniform rotor field and torque. Also it helps to reduce some of the internal magnetic noise when the motor is running.

(c) End Shields

The function of the two end shields is to support the rotor shaft. They are fitted with bearings and attached to the stator frame with the help of studs or bolts attention.

12.20. SLIP RING INDUCTION MOTOR

a. Stator Construction

The construction of the slipring induction motor is exactly similar to the construction of squirrel cage induction motor. There is no difference between squirrel cage and slipring motors.

b. Rotor Construction

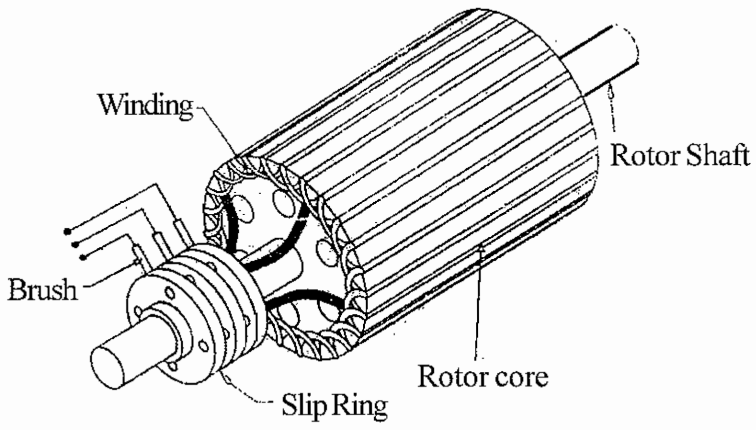

Fig:12.20

The rotor of the slipring induction motor is also cylindrical or constructed of lamination.

Squirrel cage motors have a rotor with short circuited bars whereas slipring motors have wound rotors having "three windings" each connected in star.

The winding is made of copper wire. The terminals of the rotor windings of the slipring motors are brought out through sliprings which are in contact with stationary brushes as shown in Fig:12.20.

THE ADVANTAGES OF THE SLIPRING MOTOR ARE

- It has susceptibility to speed control by regulating rotor resistance.
- High starting torque of 200 to 250% of full load value.
- Low starting current of the order of 250 to 350% of the full load current.

Hence slipring motors are used where one or more of the above requirements are to be met.

12.20.1. COMPARISON OF SQUIRREL CAGE AND SLIPRING MOTOR

S.No.	Property	Squirrel cage motor	Slipring motor
1.	Rotor Construction	Bars are used in rotor. Squirrel cage motor is very simple, rugged and long lasting. No slip rings and gear need frequent maintenance.	Winding wire is to be used. Wound rotor required attention. Slipring and brushes are needed
2.	Starting	Can be started by D.O.L., star-delta, auto transformer starters	Rotor resistance starter is required.
3.	Starting torque	Low	Very high
4.	Starting Current	High	Low
5.	Speed variation	Not easy, but could be varied in large steps by pole changing or through smaller incremental steps through thyristors or by frequency variation.	Easy to vary speed but speed change with pole changing is not possible. Speed change is possible by inserting rotor resistance using thyristors or by using frequency variation injecting emf in the rotor circuit cascading.
6.	Acceleration on Load	Just satisfactory	Very good
7.	Maintenance	Almost Nil maintenance	Requires frequent maintenance
8.	Cost	Low	

12.21. DOUBLE SQUIRREL CAGE MOTOR

In order to overcome the disadvantages of the cage motor, and to avoid having to the use the more expensive slipring motor and its associated gear, increasing attention is being given to the use of the double cage rotor is increased temporarily while starting.

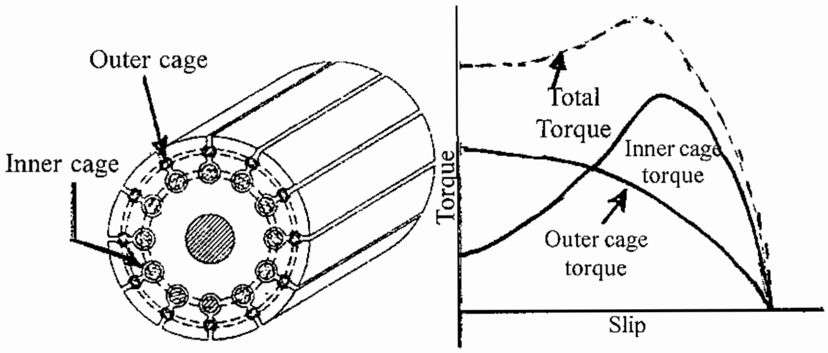

Fig: 12.21

The double cage rotor in its simple form consists of two separate cages. The outer or staring cage is made of high resistance material and is arranged to have the smallest possible reactance.

The inner cage is of the ordinary low resistance type, and since it is sunk deep into the iron, has a high reactance of the inner and outer cage can be varied in an indefinite number of combinations and many shapes of speed torque curve can be obtained.

At starting, the frequency of the currents in the rotor conductors is the same as the supply frequency. Thus the high reactance of the inner cage produces a choking effect and reduces the currency flowing in this winding.

Most of the starting current is confined to the outer cage despite its high resistance. The outer cage being of high resistance develops a high starting torque depending largely on the value of its resistance.

A punching of such a double cage rotor lamination is shown in the Fig:12.21. As the rotor speed increases, and approaches synchronism, the frequency of the emf's on its conductors falls and the choking effect in the inner cage is reduced.

The inner cage now carries practically all the current until finally the rotor operates with the characteristics of an ordinary low – resistance rotor. The general result is to produce a machine having a high starting torque and a high running efficiency, with reasonably small value of starting current.

Questions

Part A

Choose the correct answer:

1. The a.c supply is given to the stator winding of the 1ϕ motor the flux wil be produced as

   a. Steady magnetic flux. b. Rotating magnetic flux

   c. Alternating magnetic flux d. none of these.

2. In 1ϕ motor to make it a self starting techniques can be adopted

   a. By increasing the supply voltage b. By increasing the line current

   c. By reducing the load d. By splitting in phase

3. In the split phase motor the main winding current Im lags the supply voltage by about

   a. 90^0 b 15^0 c. 80^0 d. 120^0

4. The starting winding is opened by a centrifugal switch when the motor has come up to about

   a. 75 - 80% of synchronous about b. 100% of synchronous speed

   c. 50% of synchronous speed d. 1/3 of the synchronous speed

5. In the capacitor start motor the starting capacitor leads the starting current by about

   a. 90^0 b. 120^0 c. 70^0 d. 20^0

6. The starting torque of slipring induction motor is

   a. 200 - 250% of the full load value b. 300 - 450% of full load value

   c. 350 - 400% of the full load value d. 250 - 350% of full load value

7. outer cage of Double squirrel cage rotor is made up of

   a. brass b. copper

   c. Aluminium d. Bronze

Part - B

Answer the following questions in one wore:

1. What is the power rating of fractional horse power?
2. What are the two types of capacitors used in capacitor start, capacitor run motor?
3. Write the metal to be used for the shading coil
4. What about the repulsion motor cost?

5. State the name of the motor which works on AC/ DC
6. Why the end rings of the squirrel cage rotors are short circuited?
7. Give one advantages of the slipring motor

Part - C

Answer the following questions in briefly:

1. What are the types of single phase motors?
2. What are the advantages of capacitor start, capacitor run motor?
3. State the universal motor rotational direction can be changed?
4. What are the advantages of three phase induction motor?
5. What is the rotating magnetic field?
6. What are the two types of 3ϕ inductions motors?

Part - D

Answer the following questions in one page level:

1. Explain the construction and operation of 1ϕ capacitor start capacitor run motor?
2. Explain the construction and operation of 1ϕ shaded pole motor?
3. Compare the squirrel cage motor and slipring motor?

Part E

Answer the following questions in two page level:

1. Explain the constructional details of squirrel cage Induction motor?
2. Explain the constructional details of slipring Induction motor.

13. MOTOR STARTERS

13.0. AC MOTOR STARTERS

Necessity of starters

Induction motors when direct-switched take five to seven times of their full load current and develop only 1.5 to 2.5 times their full load torque. This initial excessive current is objectionable. Because, it will produce large line voltage drop that, in turn, will affect the operation of other electrical equipment connected to the same lines. Hence, it is not advisable to line start motors of rating above 30 to 50 HP.

The initial inrush of current is controlled by applying a reduced voltage to the stator during the starting period and full normal voltage is applied when the motor has run at the rated speed. For the above reason starters are used.

Indian Electricity Rule strictly prohibits direct ON-starting of three phase induction motors above 5 HP.

TYPES OF INDUCTION MOTOR STARTERS

1. Full voltage Direct-on-line starting

    (a) D.O.L. starter.

2. Reduced voltage starting.

    (a) Start-delta starter (b) Auto transformer Starter.

3. Rotor Resistance Starter – Rotor Control.

FULL VOLTAGE DIRECT ON LINE STARTING

13.1. D.O.L. Starter

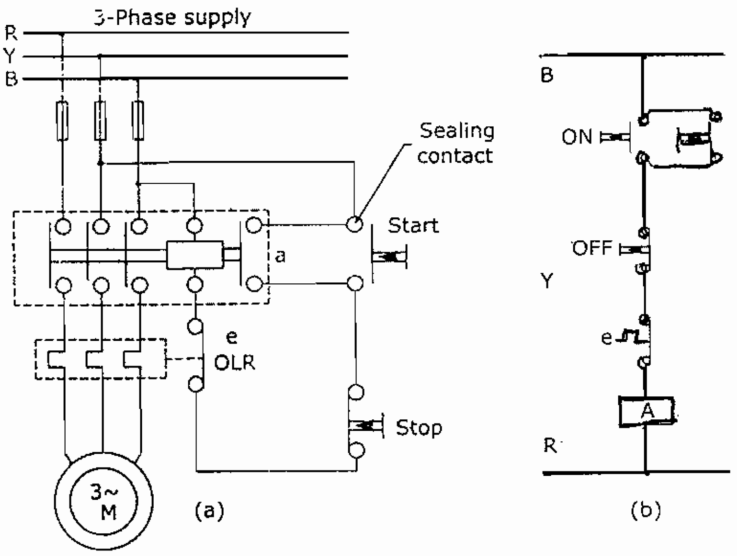

Fig: 13.1

It is recommended that large three phase squirrel cage induction motors be started with reduced voltage applied across the stator terminals at starting. But small motors upto 5 HP ratings may however be started Direct-On-Line (DOL).

Direct-on-line method of starting of induction motors applicable upto a rating of 5 HP is shown in Fig:13.1. In the circuit in addition to fuses, thermal overload relay has been used to protect the motor windings against over load.

When the "start" push button is pressed, the contactor coil 'A' becomes energized and it's open contacts are closed. The motor gets connected across the supply mains through the main contacts of the contactor. The motor continues to get supply even when the pressure on the push button is released, since the contactor coil will then get supply through the sealing contact 'a' of the contactor.

Contactor 'a' of the contactor A is therefore called the hold on contact. When the STOP push button is pressed the foil gets de-energised, the main contacts of the contactor opens and the motor stops. In case of overload on the motor, the contact 'e' of the overload relay (OLR) will open and subsequently the motor will stop. Fuses are provided for short circuit protection.

13.1.1. REDUCED VOLTAGE STARTING

Reduced voltage can be applied across the stator circuit either by use of an auto transformer or by connecting resistor or inductors in series with the stator winding or by connecting the stator winding at the time of starting in star. These methods are described as follows:

1. Star Delta Starting

2. Auto Transformer Starting.

13.2. Star Delta Method of Starting

In this method the stator-phase windings come first connected in "STAR" and full voltage is connected across its free terminals. As the motor picks up speed, the windings are disconnected through a switch and they are reconnected in "DELTA" across the supply terminals. The current drawn by the motor from the lines is reduced to 1/3 as compared to the current it would have drawn if connected in delta.

REDUCED TORQUE DUE TO STAR CONNECTION:

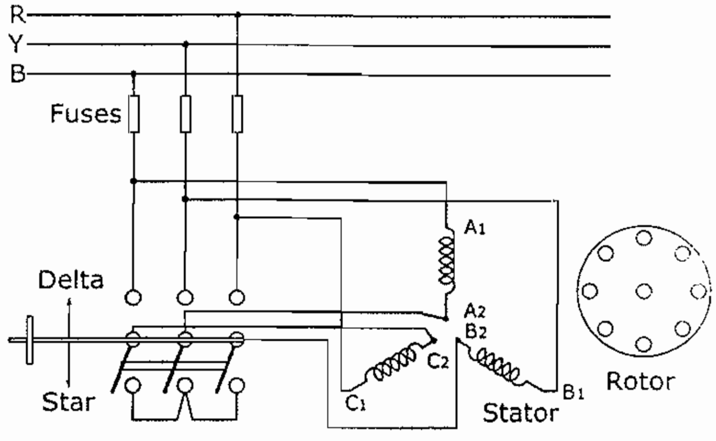

Fig: 13.2

Torque developed by an induction motor is proportional to the square of the applied voltage. As the phase voltage is reduced to 1/3 times that in star connection, the starting torque will be reduced to one third. To get full torque in the motor it must be switched over to Delta connection. A simple manual Star-Delta Starter is shown in Fig: 13.2.

The making connections for star delta starting, care should be taken such that sequence of supply connections to the winding terminals does not change while changing from Star-connection to delta connection. Otherwise the motor will start rotating in the opposite direction, when connections are changed from star to delta. Star-delta starters are available for manual operation using push button control. An automatic star-delta starter uses time delay relays (TDR) through which star to delta connections take place automatically with some pre-fixed time delay. The delay time of the TDR is fixed keeping in view the starting time of the motor.

13.3. AUTO TRANSFORMER STARTER:

An auto transformer starter consists of an auto transformer and a switch as shown in Fig:13.3.

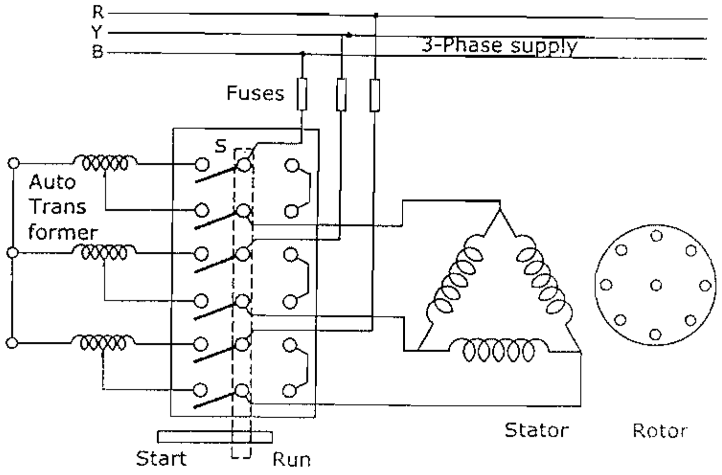

Fig:13.3

When the switch 'S' is put on "START" position, a reduced voltage is applied across the motor terminals. When the motor picks up speed, say to 80 percent of its normal speed the switch is put to "RUN" position. Then the auto transformer is cut out of the circuit and full rated voltage gets applied across the motor terminals.

The circuit diagram in Fig:13.3 for a "manual auto transformer starter". This can be made push-button operated automatic controlled starter so that the contacts switch over from start to run position as the motor speed picks up of 80% of its speed. Overload protection relay has not been shown in Fig:13.3.

The switch "S" is air break type for small motors. More than one tapping to enable the user to select any suitable starting voltage depending upon the conditions.

13.4. ROTOR RESISTANCE STARTER

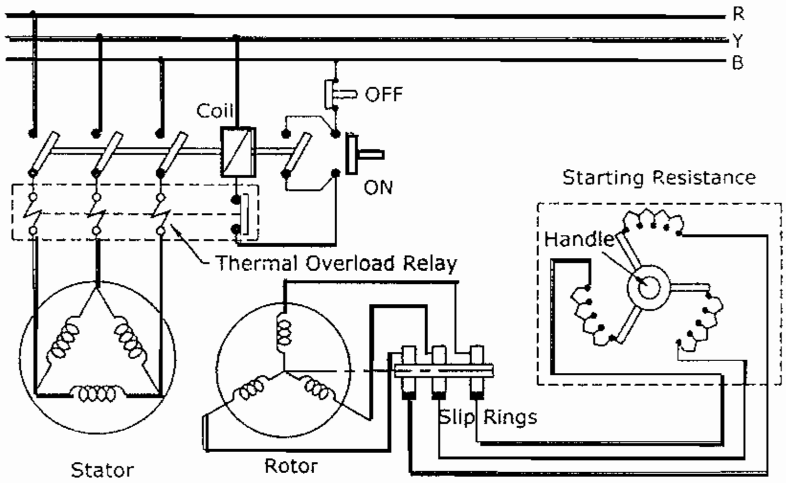

Fig:13.4.

The easiest method of starting wound-rotor (slip ring) induction motors to connect some extra resistance in the rotor circuit as shown in Fig:13.4.

Connection of extra resistance in the rotor circuit decreases the starting current and at the same time increases the starting torque.

As the motor starts rotating the extra resistance is gradually cut out. When the motor attains rated speed the resistance is fully cut out and slipring terminals are short circuited. The motor now operates on its own characteristics which gives rise to maximum torque at a low slip.

13.5. DC MOTOR STARTER

THREE POINT STARTER

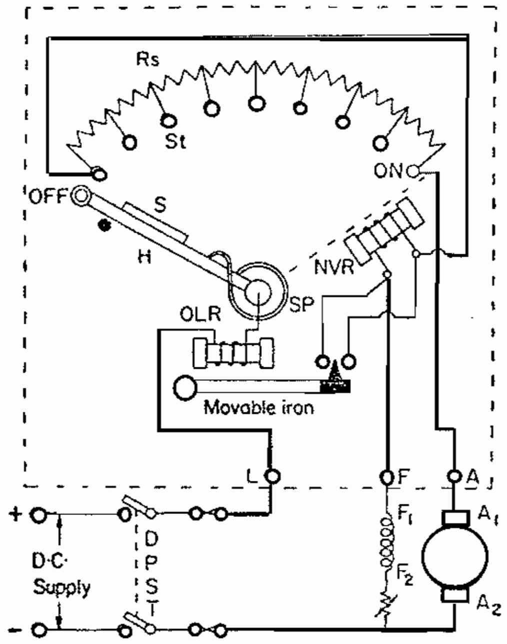

Fig: 13.5

Three point starter is used to start the shunt and compound motor. In three point starter, three terminals L,A,F (Line, Armature and Field) are available. In this starter, the resistance elements are mounted on the back side of a slate board. On the front side of the board, brass studs are provided and the resistance junctions are connected with each brass stud. Two protective device overload release and no volt release are incorporated in the circuit as shown in the diagram. The handle of the starter is fixed in such a way to move the brass studs.

When the handle touches the first stud, the full resistance is connected in series with the armature. The field circuit is connected across the full supply voltage. As the handle is moved over the studs, the resistance connected in series with the armature circuit is gradually cut out. The handle move against spring force as shown in the diagram.

A soft iron piece is attached to the handle. The soft iron piece is attached by the electro-magnet (NVR), when the handle reaches the "ON" position. In case of a failure of the supply or the voltage is very low, the electro magnet de-energises and release the armature. The spring force bring the handle to "OFF" position.

PROTECTIVE DEVICES:

No Volt Release (NVR)

This consists of an electro magnet (NVR). This is connected in the field circuit. As soon as the field circuit gets supply, this is energized. It holds the handle in the "ON" position. As explained above, in case of a failure of the supply, this becomes de-energised and the handle is released from "ON" position. The handle returns to "OFF" position, due to the action of the spring. If this provision is not provided, when the supply were restored, the current through the armature is high and this will damage the armature windings.

OVERLOAD RELEASE (OLR)

This also consists of an electro magnet. This electro magnet coil is energized by the line current. When the load on the motor is increased above a pre-determined value, the magnetizing force established is sufficient to lift the movable iron. When it is lifted by the electro magnet of OLR it short circuits the terminals of the coils of the No volt release. Hence, the No volt coil is de-energised and the starter handle returns to "OFF" position. Thus the overload release protects the motor against over loads.

This starter is not generally used where the field current is often adjusted for a higher speed than the normal speed, the handle returns to the OFF position. This may cause for reduction in field current.

This is disadvantageous in Three point starter and it is eliminated in Four point Starter.

13.6. FOUR POINT STARTER

The four point starter is used for starting shunt and compound motors.

The four point starter, the four terminals L+, L-, A and F (Line+, Line-, Armature and Field) are available.

The constructional details and an operational details are the same as that of the three point starter, except the following difference.

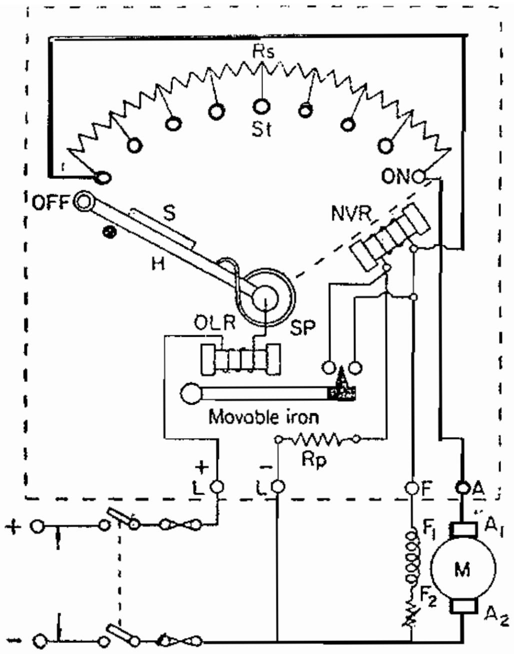

Fig:13.6

In three point starter, the coil of the No volt release is connected in series with the field circuit. But in four point starter, the coil of the no volt release does not carry the field current. It is connected across the supply line through a protective resistance Rp. The no volt coil is independent of the field current, so any change in shunt filed current do no effect the current through the no volt coil. The current through the no volt coil does not decrease even when the field reneostat is adjusted for speed variations. The electro magnetic pull produced by the no volt coil will always be the same and sufficient to hold the handle in "ON" position. Thus, the misoperation as in three point starter never takes place in Four point Starter.

QUESTION

Part A

Choose the correct answer:

1. 3Ø induction motors draw the very large current at time of starting as

a. 3 times of full load value	b. 2 1/2 times of full load value
b. 7 times of full load value	d. none of these

2. Reduced voltage starting types of induction motor starter is

a. Star - delta starter	b. D.O.L starter
c. Rotor resistance starter	d. 3 Point starter

3. Fuses are provided in the D.O.L Starter for

a. limit the supply voltage	b. limit the current
c. reduce the starting current	d. short circuit protection

4. The supply voltage is reduced in star connection as

   a. $1/\sqrt{3}$ times   b. 1/3 times   c. 1/2 times   d. 2/ 3 time

5. In the three point starter NVR Coil is connected in the

   a. armature circuit   b. Field circuit

   c. Across the supply main   d. in between armature and field circuit

6. Over load release coil protects the motor against

   a. over loads   b. over voltage   c. over speed   d. over heat

7. In four point starter the NVR coil is connected in the

   a. field circuit   b. Armature circuit

   c. across the supply line through a protective resistance   d. across the supply line

Part - B

Answer the following questions in one word:

1. Mention the suitable starter for 5 HP squirrel cage induction motor.
2. Mention the suitable starter for 30 HP squirrel cage induction motor.
3. What type of connection is done in the winding at the time of starting start delta starter operation?
4. Write the method of starting by using auto transformer starter?
5. Where the extra resistance should be added in the slipring induction motor?
6. State the protective divices of three point starter?
7. Write the four points of the four point starter.

Part - C

Answer the following questions in briefly

1. What are the types of induction motor starters?
2. What are the methods of reduced voltage starting?

Part - D

Answer the following questions in one page level

1. Explain the operation of D.O.L starter?
2. Explain the operation of auto transformer starter?
3. Explain the operation of rotor resistance starter?

Part - E

Answer the following questions in two page level

1. Explain the operation of three point starter?
2. Explain the operation of four point starter?

14. ELECTRONICS

14.0. ATOMIC STRUCTURE

All matters consist of atoms. According to Bohr's theory, an atom consists of three particles, namely – electron, proton and neutron. The proton is a positively charged particle the electron is a negatively charged particle and the neutron is an electrically neutral particle. The protons and neutrons are clustered together to form a hard central area, called nucleus (positive charges). The electrons revolve around the nucleus, in a well defined path called orbit.

In a normal atom, the number of protons is equal to the number of electrons. Hence, the entire atom is said to be electrically neutral.

Atomic number	-	Number of electrons
	-	Number of protons.
Atomic weight of an atom	-	Number of protons + Number of neutrons.

14.1. ARRANGEMENT OF ELECTRONS IN ATOMS

The electrons revolve around the nucleus, in different energy levels, called K,L,M,N, etc. shells. The K shell is placed in close to the nucleus, the next shell is L and so on. The maximum number of electrons in any shell is given by the relation of 2n2 (i.e. n – order of the shell, counted from nucleus).

The maximum number of electrons placed in different shells are given below:

K Shell (First Shell)	=	1 orbit = 2 x 1sq. = 2 electrons.
L Shell (Second shell)	=	2 orbits = 2 x 2sq. = 8 electrons
M Shell (Third shell)	=	9 orbits = 2 x 3sq. = 18 electrons
N Shell (Fourth shell)	=	16 orbits = 2 x 4sq. = 32 electrons.

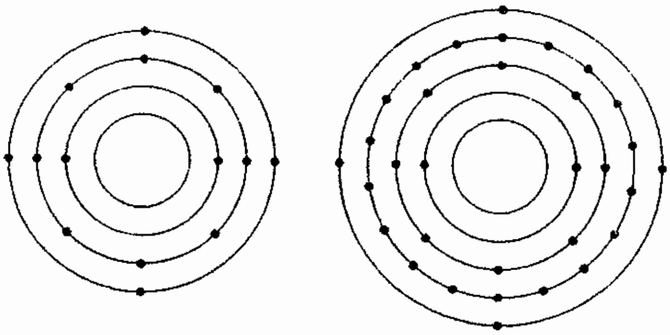

Fig: 14.1

Each shell contains one or many orbits. Each orbit contains only two electrons, which revolve around the nucleus in opposite directions. The arrangement of electrons in silicon (Si) and germanium (Ge) atoms, is shown in the Fig:14.1. The atomic number of silicon is 14 and germanium is 32.

In Si atom, the electrons are arranged in the following manner.

Si(14), K(=2), L(=8), M(=4)

The maximum number of electrons to be placed in the M shell is 18. But in Si, it contains only 4 electrons. Similarly in Germanium atom, the electrons are arranged as:

Ge(32), K(=2), L(=8), M(=18), N(=4).

The outer shell contains only 4 electrons irrespective of 32 electrons.

The electrons placed in the orbits close to the nucleus are called bound electrons. Similarly, the electrons placed in the orbits away from the nucleus are free electrons. The electrons placed in the outermost orbit are called Valence Electrons. The conduction of an atom depends on Valence Electrons.

14.2. ENERGY LEVELS

The energy band occupies by Valence Electrons is called Valence Band. During conduction, the electrons are moved from one orbit to another, or from one atom to another atom. This energy band is called conduction band. During conduction, the electrons are moved from valence band to conduction, the electrons are moved from valence band to conduction band. The energy gap between valence band to conduction band. The energy gap between valence band and conduction band is called forbidden energy gap. The energy level diagrams of insulator, semi-conductor and conductor are shown in the Fig:14.2.

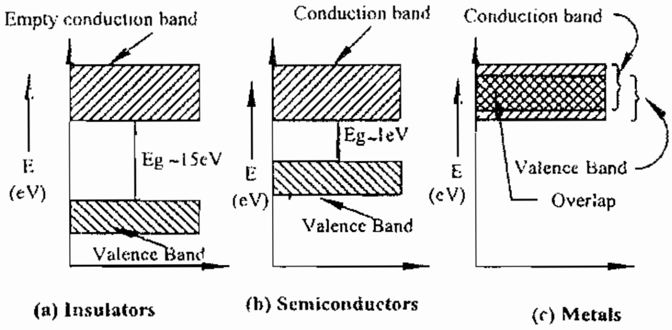

Energy band diagram

Fig:14.2

Insulator

In insulators (wood, glass), the forbidden energy gap is very high (-15ev). If the energy applied to the insulator is more than 15ev, the electrons are moved from valence band to conduction band. But this energy will destroy the insulators, not possible to apply in insulators.

Semi-conductor

In semi-conductors (silicon, germanium) the forbidden energy gap is only 1eV. Therefore, a small amount of energy is required for moving the electrons from valence band to conduction band.

Conductor

In conductors (Aluminium, Copper), the valence band and conduction band are overlapped with each other. Hence, without applying any energy, large number of free electrons are available in the conduction band. Hence large current flows in conductors.

14.2.1. TYPES OF SEMI-CONDUCTORS:

In every elements, the atoms, are tied together by the bending action of valence electrons. Si and Ge atoms contain only 4 valence electrons. These electrons have a tendency to fill the last outermost orbit. In this way, the electrons placed in the last orbit of an atom share the electrons with their neighbouring atoms. Similarly, all electrons are tied together with their neighbouring atoms. For this, they form a band called co-valent bond.

The semi conductors are classified as follows:

Semi-conductors

Intrinsic Semi conductors

Extrinsic Semi conductors

N.Type Semi-conductors

P.Type Semi-conductors.

14.3. INTRINSIC SEMI CONDUCTORS

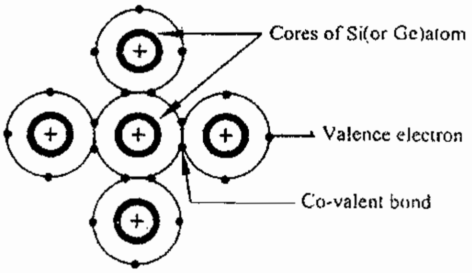

Fig:14.3

A pure semi conductor is called intrinsic semi conductor. The silicon and germanium atoms contains only four electrons in the outermost orbit. So they are called tetravalent atoms. The co-valent band structure of germanium atom is shown in the Fig:14.3.

At low temperature (0 K), the semiconductor behaves as a perfect consulator. Now no electrons get away from the co-valent band. So the current flow (electron flow) is zero. At room temperature, some of the valence electrons may acquire sufficient energy. The bonds may be broken, the electrons become free and are shifted to the conduction band as shown in the Fig:14.4.

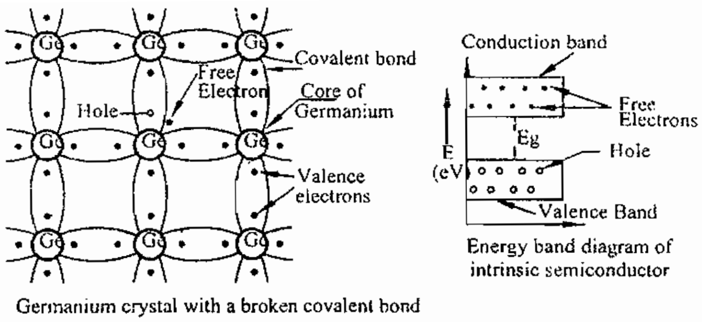

Fig:14.4

The motion of electrons constitutes electron current. The vacancy created by this electron in the valence band is known as holes, and acquires a positive charge. The combination of electron and hole is known as electron hole paid. In the intrinsic semi-conductors, the number of electrons is equal to the number of holes. The amount of current flow depends upon the number of electron-hole pairs broken, depends upon the applied electric field (Voltage).

When an external electric field is applied across the intrinsic semi conductor, more number of electron hole pair combinations will be broken. According to the amount of electric field, many free electrons are moved to the positive potential through holes called electron current. Now the holes are moved towards the negative potential called hole current. The sum of electron current and hole current is known as electric current.

EXTRINSIC SEMICONDUCTOR

The electrical conductivity of pure semiconductor is increased by adding some impurities in it. The resultant semi-conductor is called extrinsic semi conductor. The process of adding impurities to a pure semi conductor is known as doping. The purpose of adding impurities in the pure semi conductor is to increase the number of free electrons or holes, for increasing their conductivity.

The extrinsic semi conductors are divided into two types. They are N-type semi conductors and P-type semi conductors.

14.5. N-Type Semi conductors

N-type semi conductor is formed by adding a small amount of pentavalent impurities (such as arsenic, antimony or phosphorous) to a semi conductor (such as silicon or germanium) material. The added impurities are called donar impurities because they will donate electrons.

Germanium atom has four valence electrons, and antimony has five valence electrons. The antimony forms co-valent bonds with their surrounding for germanium atoms. The co-valent bond structure and energy band diagram of N-type semi conductor is shown in Fig:14.5.

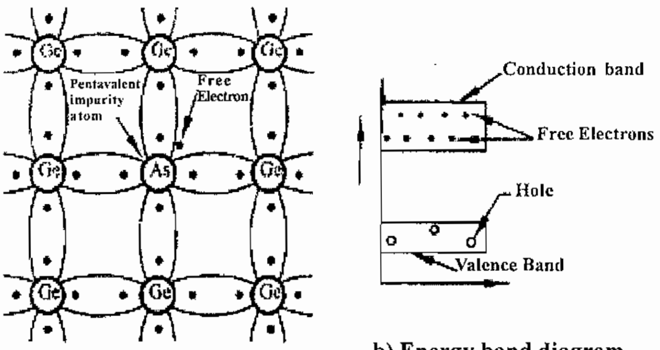

a) Covalent bond b) Energy band diagram

Fig:14.5

The four valence electrons of antimony atom form co-valent bonds with four valence electrons of individual germanium atom. The fifth valence electron of antimony is left free, loosely bound to the antimony atom.

This loosely bound electron can be easily excited from the valence band to the conduction band by the application of small electric field. The extra electron creates impurity because it can donate one electron for conduction.

Thus the addition of pentavalent impurities increases the number of electrons in the conduction band, thereby increasing the conductivity of the semi conductor. Now the semi conductor contains more electrons and less holes. Hence it is called N-type semi conductor. So the electrons are called majority carriers and holes are called minority carriers.

14.6. P-TYPE SEMI CONDUCTOR

P-type semi-conductor is formed by adding a small amount of trivalent impurities (such as Aluminium or Boron) to a pure semiconductors (such as Silicon or Germanium) material. Three valence electrons in aluminium from co-valent bond with four surrounding atoms of Ge. Now one co-valent bond is incomplete, which gives rise to a hole. The co-valent bond structure and energy band diagram are shown in the Fig:14.6.

For this, more number of holes (positive charge) are generated. The holes increase the conductivity of the P-type semiconductor.

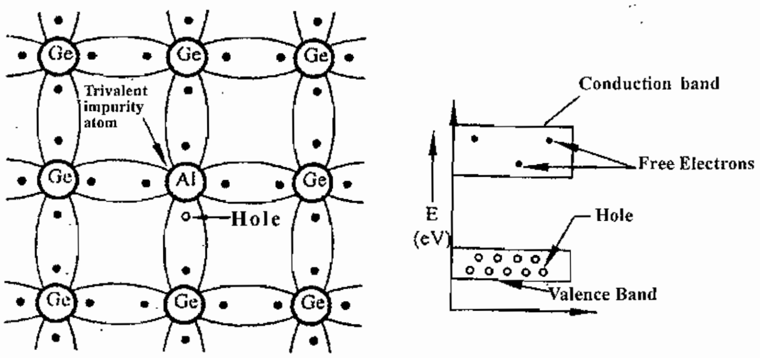

a) Covalent bond b) Energy band diagram

Fig:14.6

This impurities are known as acceptor impurities, because the holes created can accept electrons. The number of holes is more than the number of electrons. In P-type semiconductors holes are majority carriers and electrons are minority carriers.

14.7. P-N Junction Diode (Semiconductor Diode)

A PN Junction is formed by suitably joining a P-type semi-conductor and a N-type semiconductor. A PN Junction is shown in the Fig:14.7.

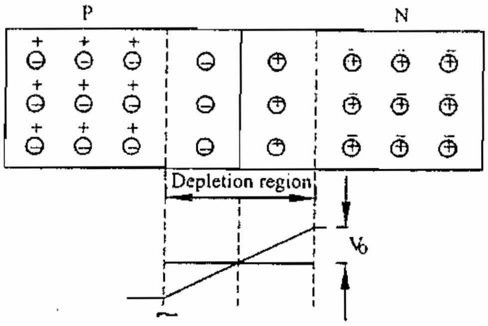

Fig:14.7

The P-type semiconductor has more holes and less electrons. The N-type semiconductors has more electrons and less holes. Therefore at the junction , the electrons in the N-side have a tendency to move towards the P-side. Similarly, the holes on the P-side have a tendency to move towards the N-side. According to that, the electrons and holes recombine with each other to form a region at the junction. It is "depletion region". When the free electrons move from N-type to P-type, the donar irons becomes positively charged. These two charges, on either sides make a potential across the depletion region called "barrier potential".

The barrier potential opposes the flow of carriers through the junction, maintain an equilibrium level. The barrier potential aids the flow of minority carriers and opposes the flow of majority carriers through the junction. For both these opposite effects, no charge carriers are flow through the junction at normal conditions.

The net current that flows through a PN junction diode contains two components. They are (i) drift current and (ii) diffusion current.

Drift current

When an electric field is applied across the semiconductor materials, the charge carriers attain some energy. Now the holes move towards the negative terminal and the electrons move towards the positive terminals of the battery. This combined effect of movement of charge carriers constitutes a current known as :Drift Current".

Diffusion current

When no electric field is applied, the charge carriers in the semiconductor materials may produce concentration gradient. The charge carriers have the tendency to move from the higher concentration region to that of lower concentration region. Now the movement of charge carriers produces a current known as "Diffusion current".

Working of a PN Junction Diode

The construction of any diodes, depends on their biasing. There are two types of biasing, known as Forward biasing and Reverse biasing.

1.Forward Biasing:

In forward biasing, the positive terminal of the battery is connected to the P-type and the negative terminal of the battery is connected to the N-type materials of the diode, shown in the Fig:14.8.

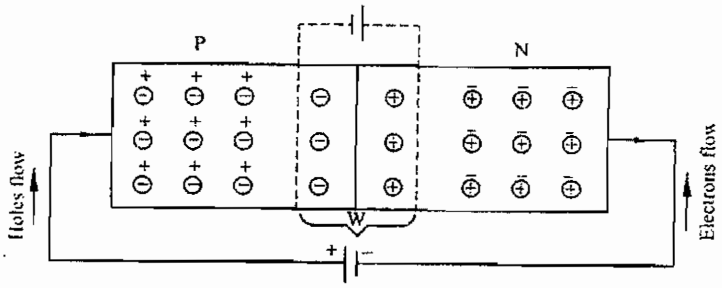

Fig:14.8

Under the forward bias condition, the applied positive potential repels the holes in P-type region. The negative potential repels the electrons in N-type regions. Now the electrons in N-type region and the holes in the P-type region move towards the junction. This reduces the width of the depletion region and also the barrier potential.

If the applied potential is greater than barrier potential, the majority carriers on both regions move towards the junction. It makes current flow through the junction. The amount of current flow depends upon the magnitude of applied potential.

The VI characteristics of a PN junction diode under forward bias condition is shown in the Fig:14.9. When the applied potential is less than cut-in or threshold voltage, the current flow is very low. The cut in voltage is generally 0.3V for Germanium and 0.7V for silicon diodes respectively. At the cut-in voltage, the applied potential overcomes the barrier potential, increases the current rapidly.

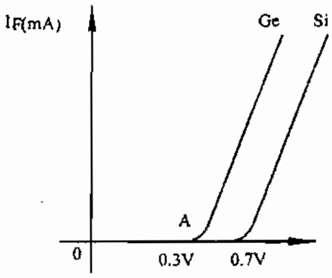

Fig:14.9.

2. Reverse Biasing

In reverse biasing, the positive terminal of the battery is connected to the N-type and the negative terminal of the battery is connected to the P-type materials of the diode shown in fig:14.10.

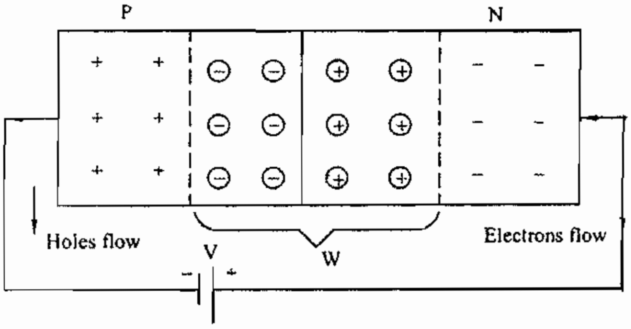

Under reverse bias condition, the majority carriers with P and N regions are moved towards the battery respectively. The holed in P-type and the electrons in the N-type regions move to the negative and positive terminals of the battery respectively. Hence, the width of the depletion region is increased which prevents the flow of majority carriers through the junction.

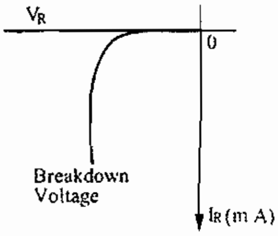

Fig:14.11

When the applied voltage is slowly increased the minority carriers (electrons) in P region and the minority carriers (holes) in N-region make a small amount of current flow through the junction. This current is called "reverse saturation current" shown in Fig:14.11.

When the applied reverse voltage is further increased, breakdown occurs in the junction. Now large reverse current flows through the junction. The minimum voltage that needs to breakdown occurs in the junction is called "breakdown voltage".

According to the operations, the diode is an uni-directional device. The diode generally permits the current in only the direction. Hence, it is used in rectifiers, clippers, clampers, etc.

DIODE APPLICATIONS

1. Rectifier in power supplies.
2. Switch in digital logic circuit
3. Clamping networks used as dc restorer in TV receivers and voltage multipliers.
4. Clipping circuits used as wave shaping circuits used in Computers, radars, radio and TV receivers.
5. Demodulation circuits used as wave shaping circuits used in Computers, radars, radio and TV receivers.

14.12. RECTIFIER

Introduction

Mostly all electronic devices require DC power for their proper operations. DC batteries are used for moving vehicles and rarely in commercial appliances, but they are costly and require frequent charging or replacement. So we can get DC power from AC lines by using regulated DC power supply. It consists of transformer, rectifier, filter and regulator.

Classification of Rectifiers

The unidirectional characteristic active element diode is used for this purpose. The rectifier converts an AC signal into DC signal. There are three different types of rectifiers, namely:

a. Half wave rectifier

b. Full wave rectifier

c. Bridge rectifier.

HALFWAVE RECTIFIER

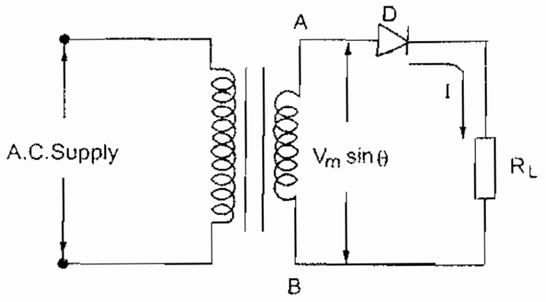

Fig: 14.12

This rectifier converts an AC input voltage into DC pulsating voltage for only one half cycles of the applied voltages. The circuit diagram of a halfwave rectifier is shown in the Fig:14.12. This circuit contains only one diode. So the output contains only positive half cycles of the input.

OPERATION

During the positive half cycles of the input signal, terminal A is positive with respect to terminal B. Now diode D conducts in forwards bias. So the current flows from terminals A to B through diode D and load resistor RL. Hence, input voltage is fully dropped across the load resistor RL.

During the negative half cycles of the input signal, terminal 'B' is positive with respect to terminal A. Now diode D conducts in reverse bias. So no current flows through the diode and load resistor. Now the output voltage is Zero.

In this circuit, the output contains only the positive half cycles of input signed. So it is called half wave rectifier. The input and output waveforms are shown in the Fig:14.13.

In this rectifier, the diode conducts only the positive half cycles of the input signal. So the current flows through the transformer is in only one direction. Hence, DC saturation of the transformer takes place. The peak inverse voltage of the diode should be atleast equal to Vm.

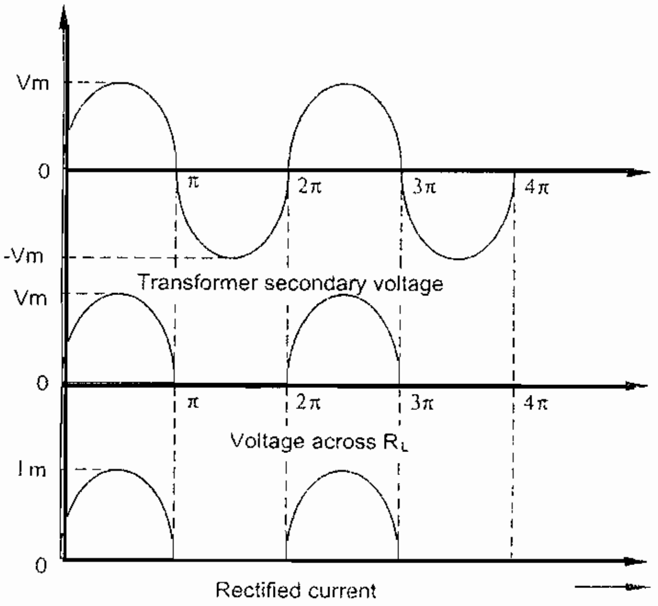

Fig:14.13

14.14. Fullwave Rectifier

Full wave rectifier contains two diodes, so these diodes conduct full cycles of the input signal. The circuit diagram of a fullwave rectifier is shown in the Fig:14.14. This rectifier uses centre tap transformer which produces two equal magnitude of voltages at the opposite terminals. One end terminal voltage is out of phase with the other end terminal voltage with respect to centre tap terminal.

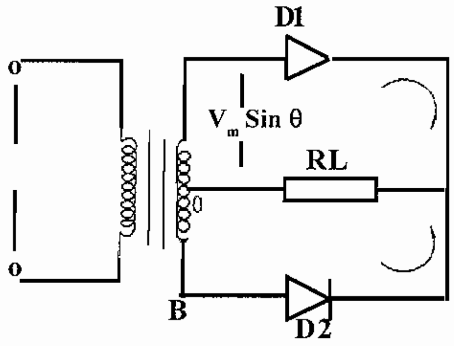

Fig.14.14

Operation

During the positive half cycles of the input voltage, terminal A is positive, and B is negative with respect to terminal O. Now the diode D1 conducts in forward bias and diode D2 conducts in reverse bias. So the current I.1 flows from the terminal A to the load through diode D1. No current flows through the diode D2.

Similarly, during the negative half cycle of the input voltage, terminal B is positive and A is negative with respect to terminal O. Now the diode D2 conducts in forward bias and the diode D.1. conducts in reverse bias. So the current i2 flows from terminal B to the load through the diode D2. The currents

i1 and i2 flows through the load in same direction. If the magnitude of applied voltage at terminal A is equal to terminal B voltage, the current i1 is equal to i2.

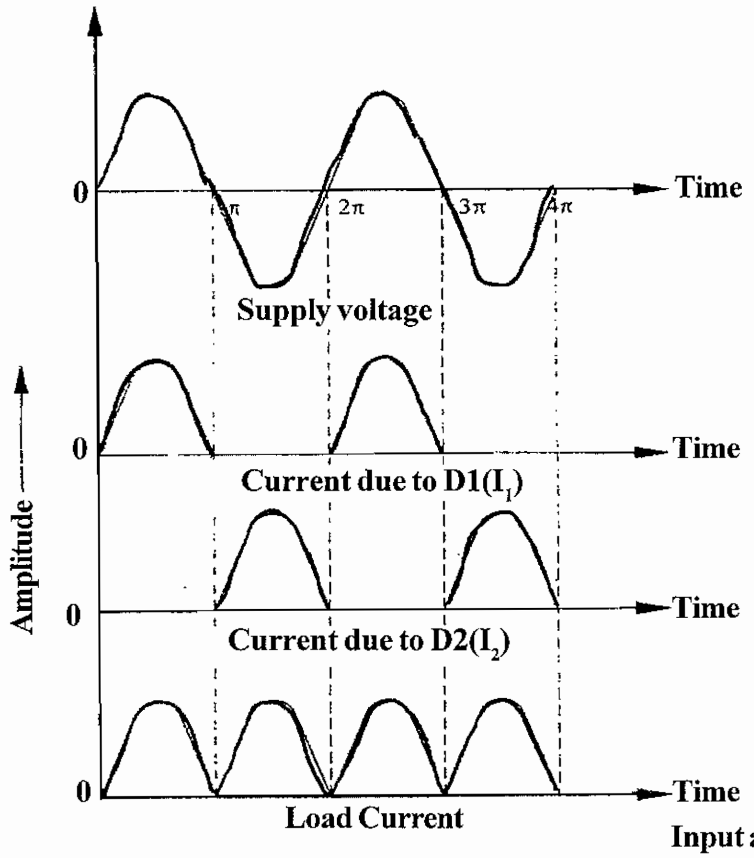

Input and output waveforms

Fig:14.15

The input and output signal wave forms are shown in the Fig:14.15.

In this rectifier, the two diode currents flow in opposite directions through the transformer. So, DC saturation of the transformer does not take place. The peak inverse voltage of the diode should be atleast equal to 2vm.

14.16. Bridge Rectifier

Bridge rectifier is also a fullwave rectifier. It contain four diodes and an ordinary stepdown transformer. The circuit diagram of bridge rectifier is shown in the Fig:14.16.

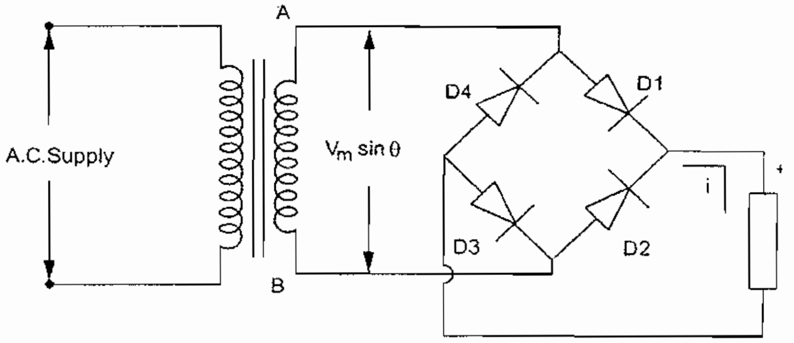

Fig:14.16

Operation

During the positive cycle of the input signal, terminal A is positive with respect to terminal B. Now the current flows through D1, RL and D2. Thus the input signal is fully dropped across the resistor RL. Now the diodes D2 and D4 are not conducting.

During the negative halfcycle of the input, terminal B is positive with respect to terminal A. Now the current flows through D2, RL and D4. Thus the input signal is also fully dropped across the resistor RL. Now the diodes D1 and D2 are not conducting.

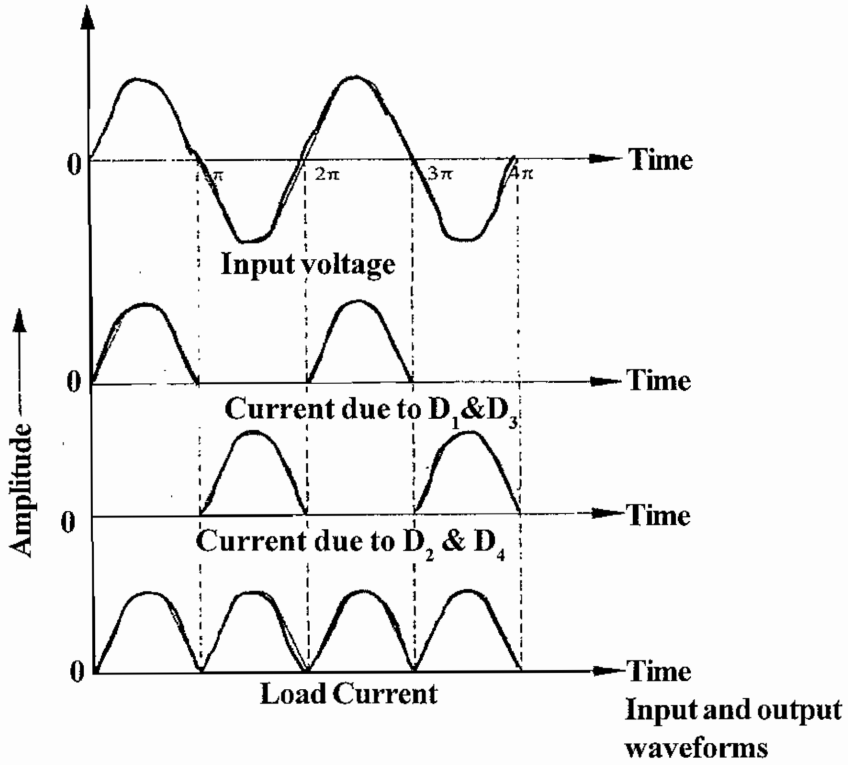

Fig:14.17.

During both half cycles, the current flows through the load resistor, RL in same direction. The input and output signal waveforms are shown in the Fig:14.17. The peak inverse voltage of the diode is equal to Vm.

Rectifier Applications

i. DC motor drivers.

ii. Welding power supplies.

iii. Uninterrupted Power Supplies (UPS)

iv. Industrial systems that require dc voltage.

14.18. Filters

Filter is a circuit contains only passive components. It is used to convert pulsating DC signal into a steady (pure) DC signal. Generally the output of the rectifier contains DC components as well as AC components. The presence of AC components in the DC signal is undesirable. So it must be removed using filters. The filter circuit removes (for minimizes) the unwanted AC signal present in the rectified output DC signal.

The various types of filters are:

i. Capacitor Filter

ii. Inductor filter

iii. LC (Inductor Capacitor Filter) LC (Inductor Capacitor Filter)

iv. π Filter

v. RC Filter.

4.19. CAPACITOR FILTER

The circuit diagram of a capacitor filter is shown in the Fig:14.18. The capacitor C is placed across the rectifier output and also parallel to the load resistor RL.

The pulsating DC voltage of the rectifier output is applied across the capacitor. The capacitor opposes the sudden variation of the voltage applied across to it. During the rising voltage of the input the capacitor charges, and during failing voltage of the input the capacitor discharges through RL.

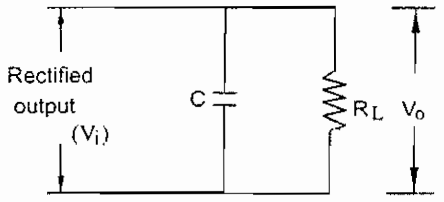

Fig:14.19 (a)

At the maximum input voltage, the capacitor charges to a maximum voltage Vm. In between the input voltage levels the capacitor does not discharge the full Vm voltage.

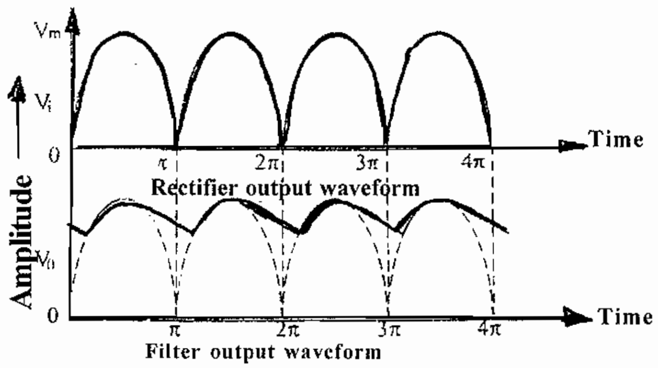

Fig:14.19. (b)

So, it will reduce the amount of AC component present in the DC signal. The input and output signal waveforms are shown in the Fig:14.19.

14.20. INDUCTOR FILTER

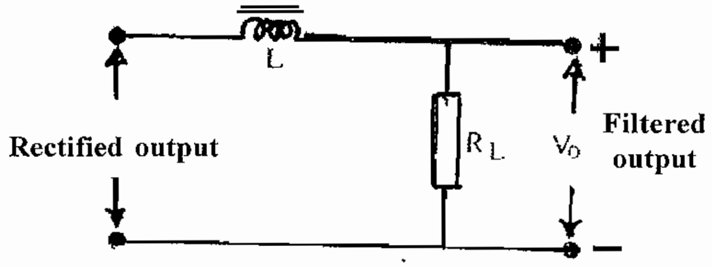

Series Inductor filer

Fig:14.20

The circuit diagram of an Inductor filter is shown in the Fig:14.20. The inductor opposes the sudden variation of current which is connected in series with the load resistor RL.

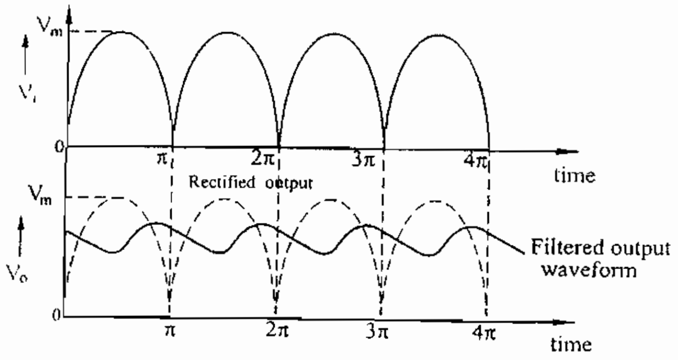

Fig:14.21.

So the inductor reduces the amount of variations of ripple current. Hence, AC ripple will be reduced. The input and output waveforms are shown in the Fig:14.21.

14.22. LC Filter

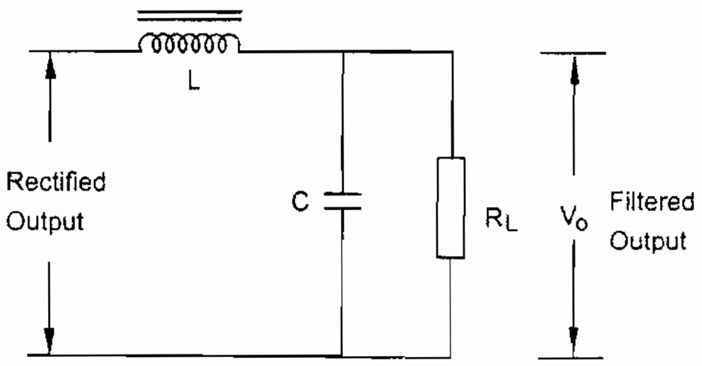

Fig:14.22.

This filter is a combination of capacitor and inductor filters. It provides low ripples than capacitor and inductor filters. The circuit diagrams of LC filter is shown in Fig: 14.22.

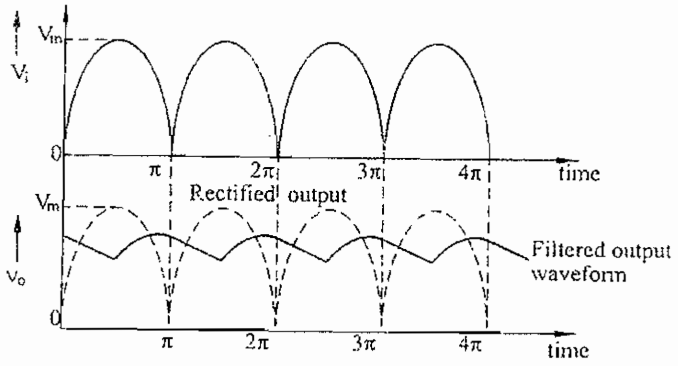

Fig: 14.23.

The inductor provides high reactance to the AC components of the rectified output and it also blocks the AC components. It passes the DC components to the load. The AC component is also once again filtered by capacitor C. Sop the output contains almost only pure DC components. The input and output signal waveforms are shown in the Fig: 14.23.

14.24. (Pπ) FILTER

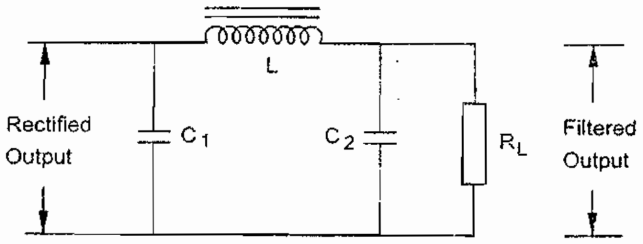

Fig:14.24.

The π filter contain two capacitors and only one inductor, form a symbol of π. It is also called capacitor input filter as shown in the Fig:14.24. The capacitor C1 offers low reactance to the ac components to the rectified output. So the AC components are bypassed to ground through C1.

The inductor L provides High reactance to the ac components. So the ac components are dropped across the inductor, it passes only the dc components.

The capacitor C2 against removes the ac components present in the dc signal. As a result the output contains only pure dc components. The large values of capacitors produce high dc output voltage.

14.25. Zener diode

Zener diode is a specially designed PN junction diode. It is a heavily doped PN junction diode. The symbol and equivalent circuit of a Zener diode is shown in the Fig: 14.25(a) and (b).

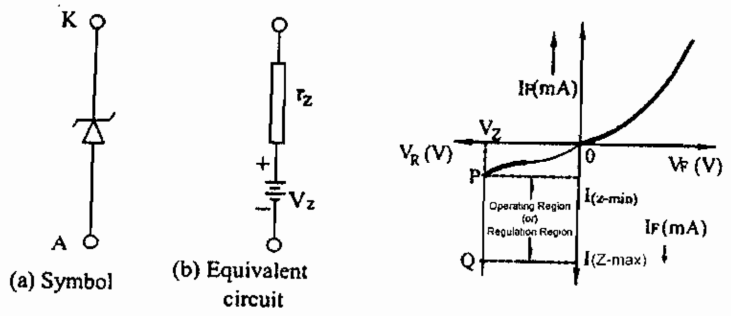

Fig:14.25

The operation of the Zener diode is same as that of an ordinary PN junction diode in forward biased condition. But in reverse biased condition, break down may occur in the junction of the diode. The breakdown voltage depends upon the amount of doping. Heavily doped diodes breakdown at low voltage levels. Similarly, lower dopes diodes breakdown at high voltage levels. The VI characteristics of Zener diode is shown in the Fig:14.25 (C).

In forward biasing, the current is linearly increased with respect to applied voltage. Now the conduction depends upon the majority carriers. In reverse biasing the current is very low before breakdown levels. After breakdown the current increases rapidly. The reverse breakdown of the Zener diode may occur due to the following mechanism.

i.Avalanche breakdown

ii. Zener breakdown.

ZENER DIODE APPLCATIONS

i.Zener diode used as a Voltage regulator.

ii. Zener diode used to meter protection purpose.

iii. Zener diode used to convert sine wave into almost square wave.

14.26. LIGHT EMITTING DIODE (LED)

LED is a specially made forward biased PN Junction diode which emits light when current flows through it.

CONSTRUCTION

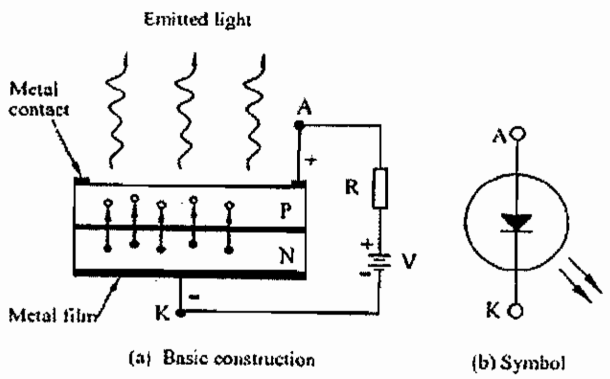

Fig:14.26.

The construction and symbol of LED is shown in the Fig:14.26. In this diode, a P-type semiconductive material is deposited on the N-type substrate layer by using diffusion method. Metal contacts (Anode) are made at the outer edge of the P-layer. A cathode connection is also formed by coating a metal film at the bottom of the N-substrate. The metal film reflects more lights to its surface. The colour of the light emits from the diodes depending upon the type of material used as given below:

i. GaAS - Infrared radiation

ii. GaP - Red or Green Light

iii. GaAsP - Red or Yellow Light.

Principle of Operation

When a forward bias supply is applied to the diode, the electrons and holes moves towards the junction and recombination take place. After recombination, the electrons lying in the conduction band of N-region move towards the holes laying in the valence band of P-region. The energy difference between valence band and conduction band is radiated in the form of light.

Characteristics

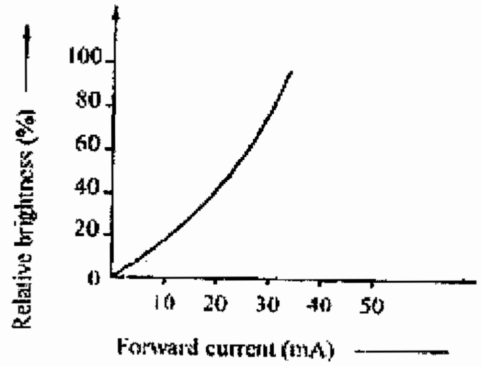

Fig: 14.27.

The illumination characteristics, between current and brightness is shown in the Fig.14.27. The amount of light emitted from the diode is directly proportional to the forward current flows through the diode.

APPLICATIONS

a. Used in ON and OFF indicators.

b. Used in programmable advertisement boards.

c. Used in optical communications

d. Used in 7 segment and 14 segment displays.

e. Used in optical switching applications.

f. Used for solid video displays

g. Used in image sensing circuits.

14.28. SEVEN SEGMENT LED DISPLAY

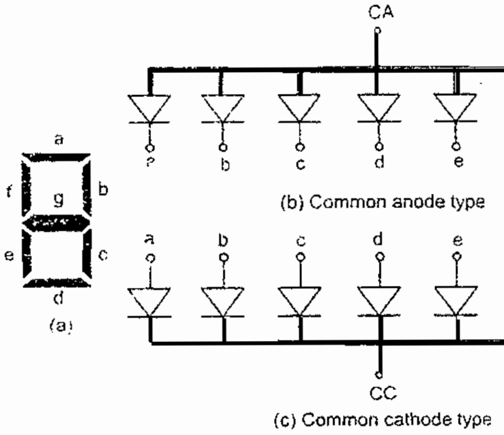

Fig:14.28.

The Fig:14.28(a) shows the structure of a seven segment LED display, it contains seven rectangular LEDs. Each LED is called a segment because it forms a part of the character being displayed.

There are two possible connections in seven segment displays. They are common anode type and common cathode type. The schematic diagram of common anode type and common cathode type of seven segment display is shown in the Fig:14.28 (b) and (c). In the common anode type, the anodes of all segments are tied together and connected to positive supply voltage (+Vcc). In the common cathode type, the cathodes of all segments are tied together and connected to ground.

Generally, the seven segment LED is driven by decoders or code converters. The choice of method selected out of common anode and common cathode depends upon the output of code converters. Such common anode and common cathode connections are available from many manufacturers in dual-in-line package similar to ICs.

Common anode connections requires active low configuration for the code converter circuitry. The active high output circuit is necessary for common cathode connected LED display. The terminals marked a,b,c,d,e,f and g are connected to the outputs of code converter. The output is generally a TTL type circuit. The value of the current flowing through the chosen LED is set by a proper choice of series resistor R.

14.29. BIPOLOR JUNCTION TRANSISTORS

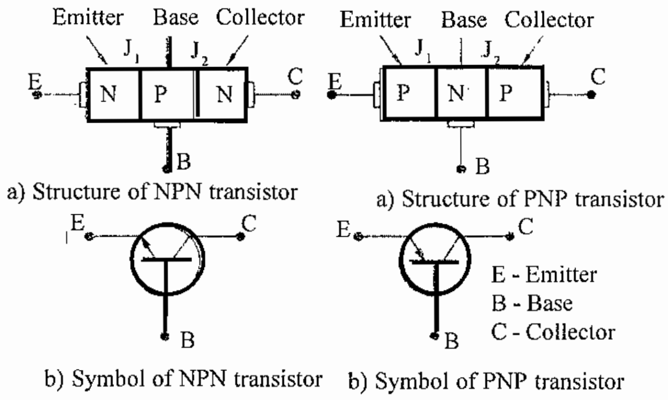

Fig:14.29.

Transistor is a semiconductor device, containing three layers and two junctions. There are two types of transistors namely (i) NPM transistor and (ii) PNP transistor.

In NPN transistors, a thin layer of P type is sandwiched between two N type layers. In PNP transistors, a thin layer of N type is sandwiched between two P type layers. The structure and symbol of both transistors are shown in the Fig:14.29.

The three portions of transistors are Emitter (E), Collector (C) and Base (B). An arrow is marked in the emitter terminal specifies the direction of current. Emitter layer is heavily doped, so that it can inject a large number of carriers into the base. Base is lightly dopes and very thin. It passes most of the injected charge carriers from the emitter into the collector. Collector is moderately dopes. It collects majority carriers from the emitter.

14.30. TRANSISTOR OPERATIONAL BIASING

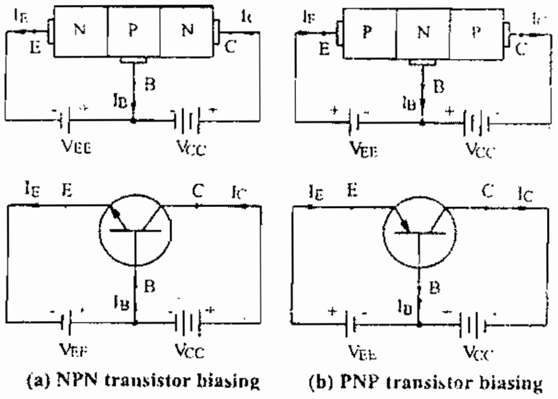

Fig:14.30

Usually the emitter base junction is forward biased and collector base junction is reverse biased, as shown in the Fig:14.30. The forward bias voltage is quite small and the reverse bias voltage is considerably large. The resistance of the forward biased base-emitter junction is low. The resistance of the reverse biased collector-base junction is high. In transistors, the weak signal is applied to the low resistance circuit, and the output is taken from the high resistance circuit. So a transistor transfers the signal from low resistance side to high resistance side. Hence it is called "TRANS" ferres "ISTOR" (Transistor).

14.31. OPERATION OF A NPN TRANSISTOR

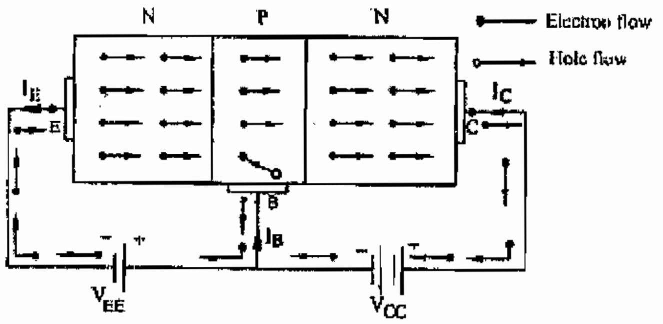

Fig:14.31.

A NPN transistor with proper biasing is shown in the Fig:14.31. The emitter-base junction is forward biased by the potential VEE. The collector-base junction is reverse biased by the potential VCC.

The forward bias potential VEE, causes a lot of the electrons from the emitter region to cross over the base region. This produces the emitter current IE. The base is lightly dopes, hence few number of electrons from the emitter recombine with the holes in the base region, producing the base current IB. The remaining electrons, move towards the collector region, by the collector-base potential VCC, which produces collector current IC.

According to the reverse bias voltage (VCC) between the collector and base, a small reverse current flows through the region. Now collector current consists of majority carriers and minority carriers, so the transistor is called Bipolar Junction Transistor (BJT). The emitter current is approximately equal to the sum of base current and collector current.

The electrons and holes move in opposite directions. The direction of the electric current is also in opposite with the direction of electron movements. According to the biasing, proactically the transistor operates in three regions, namely – active, cut-off and saturation. During active region, the input (BE junction) is in forward biasing and the output (BC junction) is in reverse biasing. In saturation region both, the input and output are in forward biasing. Similarly in cut off region, both the input and output are in reverse biasing.

14.32. OPERATION OF A PNP TRANSISTOR

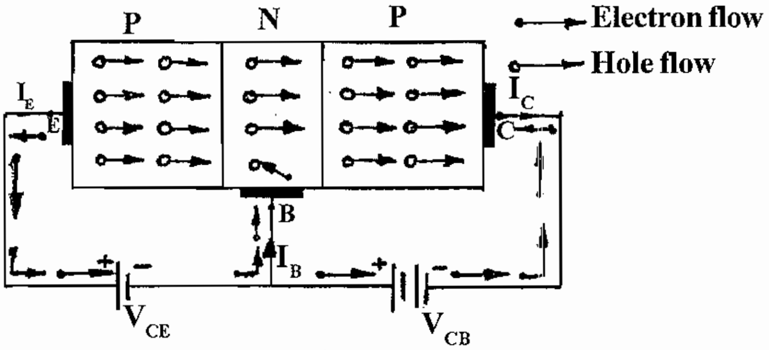

Fig:14.32.

A PNP transistor with proper biasing is shown in the Fig:14.32. The operation of PNP transistor is identical with the operation of NPN transistor. Hence, the current flow depends upon the holes (majority carriers) in the P-type emitter region.

The forward bias (with VEE) is applied in between base and emitter junction, and reverse bias (with VCC) is applied in between base and collector junction of the transistor shown in the figure.

The forward bias (VEE) causes a lot of holes from the emitter region and constitutes the emitter current, to cross into the base region. The base is lightly doped with N-type impurities. Therefore, only a few holes (less than 5%) combine with the electrons constitute a base current IB. The remaining holes (more than 95%) cross into the collector region to constitute the collector current IC. Thus the addition of collector current and base current gives the emitter current IE.

IE = IC + IB.

14.33. SCR (SILICON CONTROLLED RECTIFIER)

SCR is a three terminal (anode, cathode and gate) three junction and four layer semiconductor switching device. The basic structure and symbol of SCR is shown in the Fig:14.33

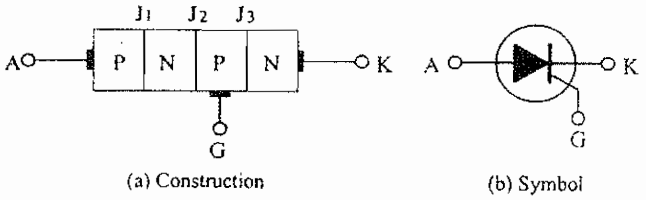

Fig:14.33.

14.34. PRINCIPLE OF OPERATION

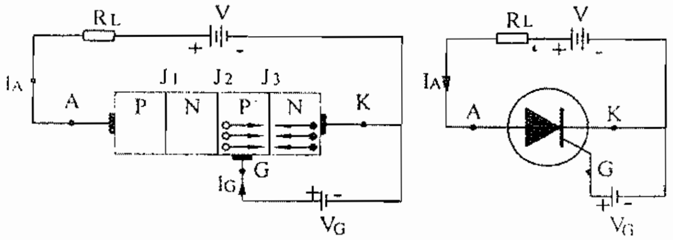

Fig:14.34.

In the normal operating conditions, a positive voltage is applied to the anode (A) and a small positive voltage is applied to the gate (G) with respect to the cathode (K) as shown in Fig:14.34.

When the gate is kept open (VG=0), the SCR is similar to a PNPN diode. The functions J1 and J3 operate in forward bias and the junction J2 operates in reverse bias. So no current flows through the SCR. Therefore, the SCR is in OFF state. The SCR now offers high resistance.

When the anode voltage is gradually increased the junction, J2 attains breakdown at a particular voltage. Now the SCR conducts heavily going to ON state. The anode voltage at which the SCR conducts heavily (ON State) without gate voltage is called "Breakover Voltage".

When a small positive voltage is applied to the gate, the junction I3 is in forward biased and the junction J2 is in reverse biased by this voltage. Now the electrons move from N-type layer (cathode) to P type layer, through the junction J3. The electrons in junction, J3 are also attracted by junction J2, and gate current starts flowing. The holes also move from P layer (G) to N layer (K) which in turn increases the anode current, and makes more electrons available at junction J2. Tis cumulative process makes to breakdown the junction J2 in a short time. Now the SCR conducts heavily.

Once an SCR is turned ON, the gate loses its control. Even if the gate voltage is removed, the SCR does not go to OFF state. To turn the device OFF is onlt done by lowering the anode voltage, and makes the current less than holding current (IH).

14.35. SCR.V.I. CHARACTERISTICS

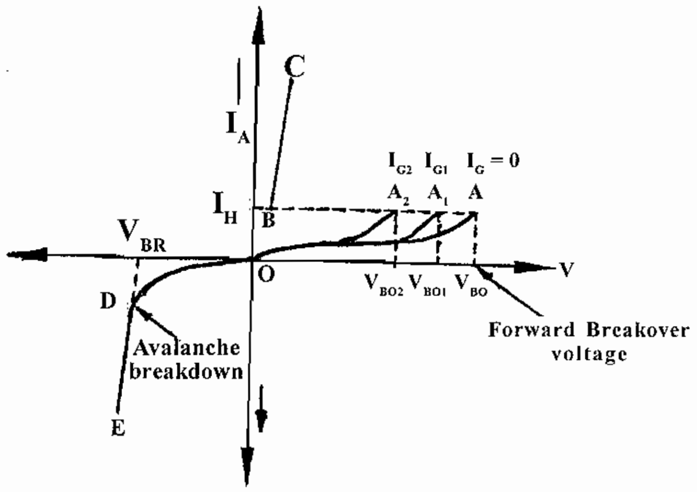

Fig: 14.35.

The high value of gate current can easily ON the device with low anode to cathode voltages. The VI characteristics of SCR are shown in the Fig:14.35.

In forward biasing, as the anode-cathode voltage exceeds the forward breakover voltage (VBO) the SCR turns ON, and the anode cathode voltage decreases quickly to a voltage marked as B.

The current at B is called holding current (IH). It is minimum value of anode current to keep the SCR in ON state. The region between the point B and C is called conduction region.

When the anode voltage is negative with respective to cathode, the junction J1 and J3 operates in reverse biasing and the junction J2 operates in forward biasing. When the reverse voltage is linearly increased, avalanche breakdown occurs in a particular reverse voltage. Now the current increases rapidly.

APPLICATIONS

i. Used in speed control of AC and DC motors.

ii. Used in invertors and convertors.

iii. Used in AC and DC circuit breakers.

iv. Used for phase control and heater control.

v. Used in battery chargers.

Questions

Part A

Choose the correct answer

1. In insulator the forbidden enerygy gap is

   a. $\simeq$ 15ev   b. $\simeq$ 10 ev

   c. $\simeq$1 ev   d. none of these

2. A pure semiconductor is called

   a. Extrinsic semiconductor   b. Intrinsic semiconductor

   c. Conductor   d. Insulator

3. N - type semi conductor is formed by adding

   a. arsenic   b. silicon   c. germanium   d. Boron

4. P - type semi conductors is formed by adding

   a. silicon   b. Germanium
   c. Aluminum or Boron   d. Phosphorous

5. The P - type seminconductor has

   a. more holes   b.less holes

   c. More electrons   d. non of these

6. The dopping level of Zener diode is

   a. Lightly   b. Heavily

   c. Medium   d. none of these

7. SCR has three junction and

   a. four layer semiconductor   b. two layer semiconductor

   c. Three layer semiconductor   d. none of these

Part - B

Write the following questions in one word

1. What are the types of extrinsic semiconductor?
2. How many diodes are used in bridge rectifier?
3. How many capacitors are used in π filter?

4. What are the two types of transistors?
5. Mention the name of the transistor three leads?
6. State the three terminals of the SCR.
7. What is the component used to removal of AC components in the DC signal?

Part - C

Answer the following questions in briefly

1. What are the application of diode?
2. Mention the classification of rectifiers
3. State the various types of filters.
4. What are the applications of LED?
5. What are the applications of SCR?
6. What is the function of filters?

Part - D

Answer the following questions in one page level

1. Draw the circuit and explain the operation of full wave rectifier?
2. Explain the constructional details of LED?
3. Explain the operation of a NPN Transistor?

Part - E

Answer the following questions in two page level:

1. Explain the working of a PN Junction diode in forward biasing and reverse biasing?
2. Explain the Principle operation of SCR and discuss the VI characteristics with neat sketch?